LOCATION MAP

Pedestrian Bridge over SR 30 (US 98)

Financial Project ID No. 451572-1-32-01
Santa Rosa County, Florida

Project Location
M.P. 3.363
SR 30 (US 98)

N

3/7/2023

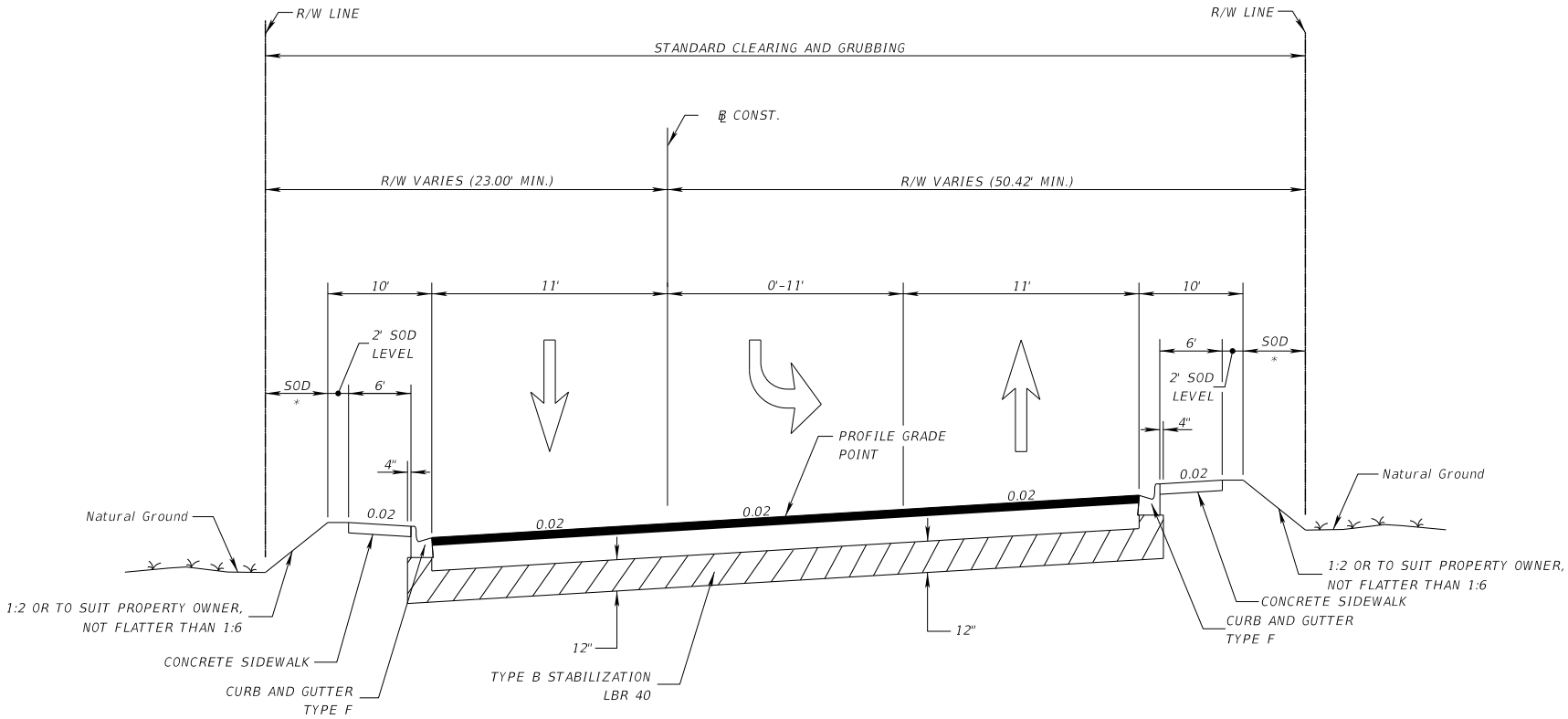

TYPICAL SECTION
SHORELINE DRIVE
STA. 194+28.29 TO STA. 199+52.20

TRAFFIC DATA

CURRENT YEAR = 2023 AADT = 6,500
ESTIMATED OPENING YEAR = AADT =
ESTIMATED DESIGN YEAR = AADT =
K = % D = % T = % (24 HOUR)
DESIGN HOUR T = %
DESIGN SPEED = 30 MPH
CONTEXT CLASSIFICATION = N/A

THE OFFICIAL RECORD OF THIS SHEET IS THE ELECTRONIC FILE DIGITALLY SIGNED AND SEALED UNDER RULE 61G15-23.004, F.A.C.

1/31/2023 3:21:37 PM shawn.wells
Z:\Projects\FDOT\184300 GULF BREEZE OVERPASS\Roadway\TYPSRD01.dgn

REVISIONS			
DATE	DESCRIPTION	DATE	DESCRIPTION

ENGINEER OF RECORD
WILLIAM P. WOODBERY, P.E.
P.E. NO.: 87269
VOLKERT, INC.
1836 HERMITAGE BLVD., SUITE 200
TALLAHASSEE, FL 32308

SANTA ROSA COUNTY

ROAD NO.	COUNTY	FINANCIAL PROJECT ID
SR 30	SANTA ROSA	451572-1-32-01

TYPICAL SECTION

SHEET NO.

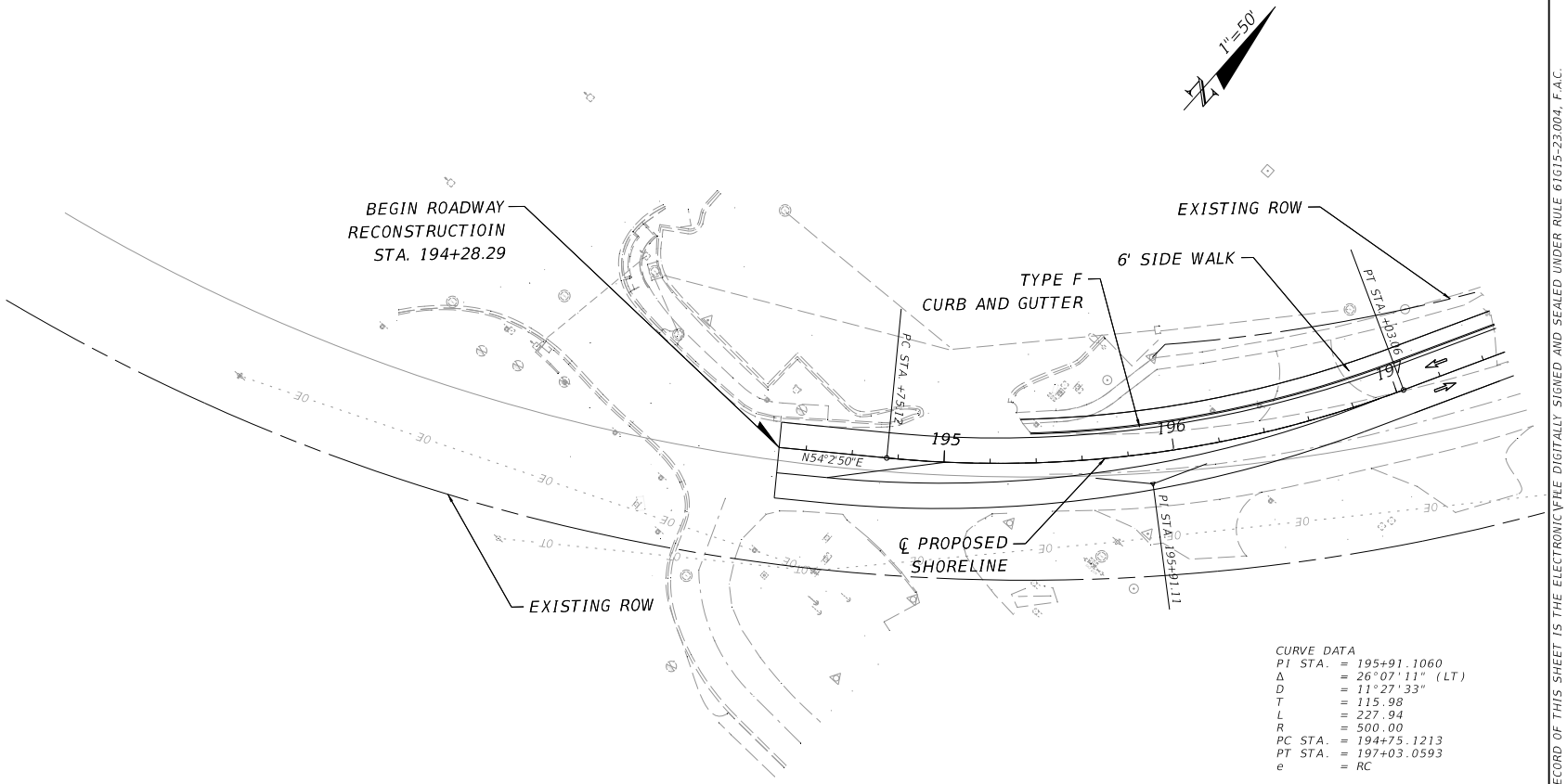

CURVE DATA
PI STA. = 195+91.1060
Δ = 26°07'11" (LT)
D = 11°27'33"
T = 115.98
L = 227.94
R = 500.00
PC STA. = 194+75.1213
PT STA. = 197+03.0593
e = RC

THE OFFICIAL RECORD OF THIS SHEET IS THE ELECTRONIC FILE DIGITALLY SIGNED AND SEALED UNDER RULE 61G15-23.004, F.A.C.

REVISIONS			
DATE	DESCRIPTION	DATE	DESCRIPTION

ENGINEER OF RECORD
WILLIAM P. WOODBERY, P.E.
P.E. NO.: 87269
VOLKERT, INC.
1836 HERMITAGE BLVD., SUITE 200
TALLAHASSEE, FL 32308

STATE OF FLORIDA
DEPARTMENT OF TRANSPORTATION

ROAD NO.	COUNTY	FINANCIAL PROJECT ID
SR 30	SANTA ROSA	451572-1-32-01

ROADWAY PLAN

SHEET NO.

3/7/2023 8:23:51 AM shawn.wells
C:\Worksets\FDOT\1184300 GULF BREEZE OVERPASS\Roadway\PLANRD01.dgn

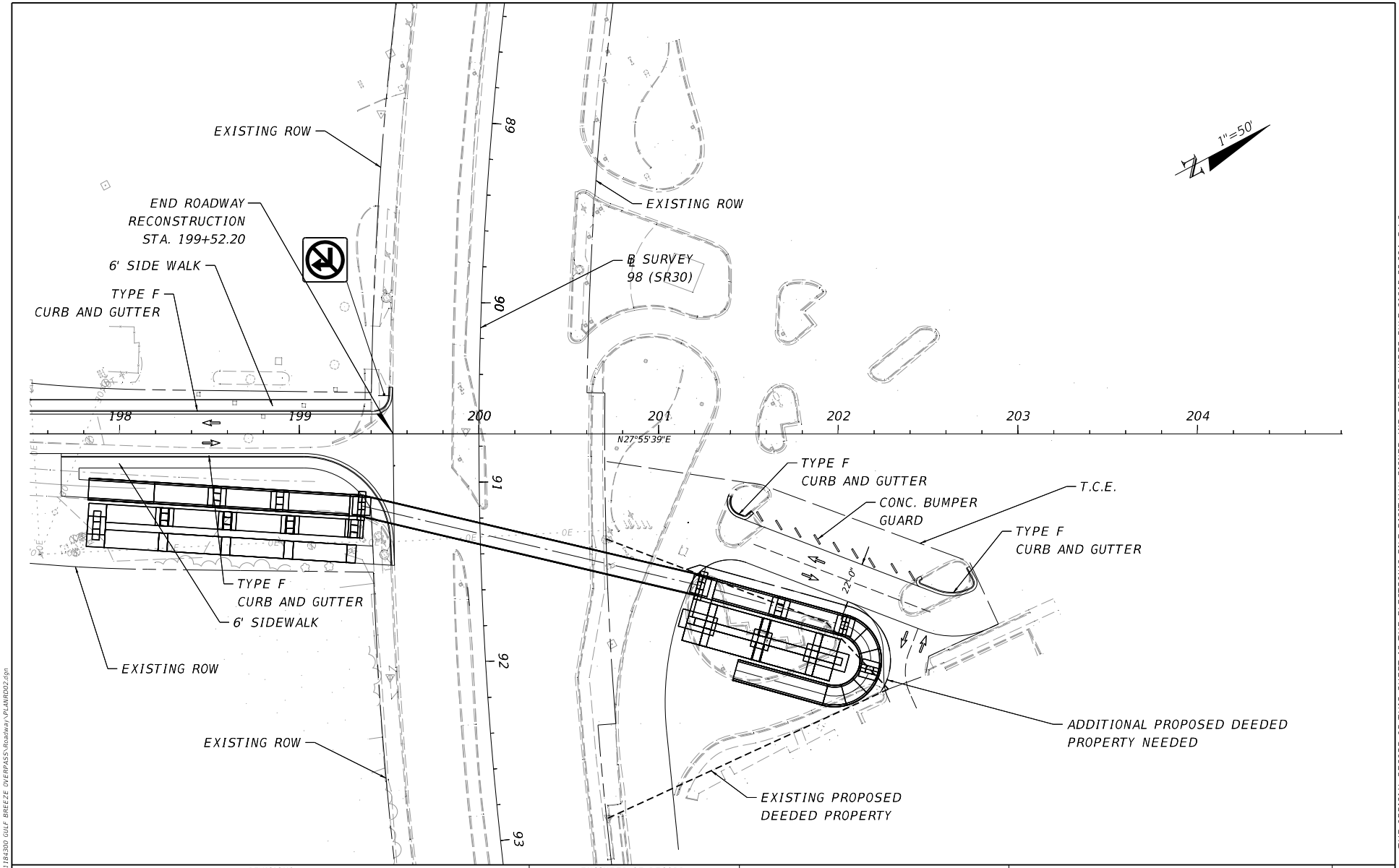

REVISIONS			
DATE	DESCRIPTION	DATE	DESCRIPTION

ENGINEER OF RECORD
WILLIAM P. WOODBERY, P.E.
P.E. NO.: 87269
VOLKERT, INC.
1836 HERMITAGE BLVD., SUITE 200
TALLAHASSEE, FL 32308

STATE OF FLORIDA
DEPARTMENT OF TRANSPORTATION

ROAD NO.	COUNTY	FINANCIAL PROJECT ID
SR 30	SANTA ROSA	451572-1-32-01

ROADWAY PLAN

SHEET NO.

3/7/2023 8:30:02 AM shawn.wells
Z:\Projects\FDOT\184300 GULF BREEZE OVERPASS\Roadway\PLAN\RD02.dgn

THE OFFICIAL RECORD OF THIS SHEET IS THE ELECTRONIC FILE DIGITALLY SIGNED AND SEALED UNDER RULE 61G15-23.004, F.A.C.

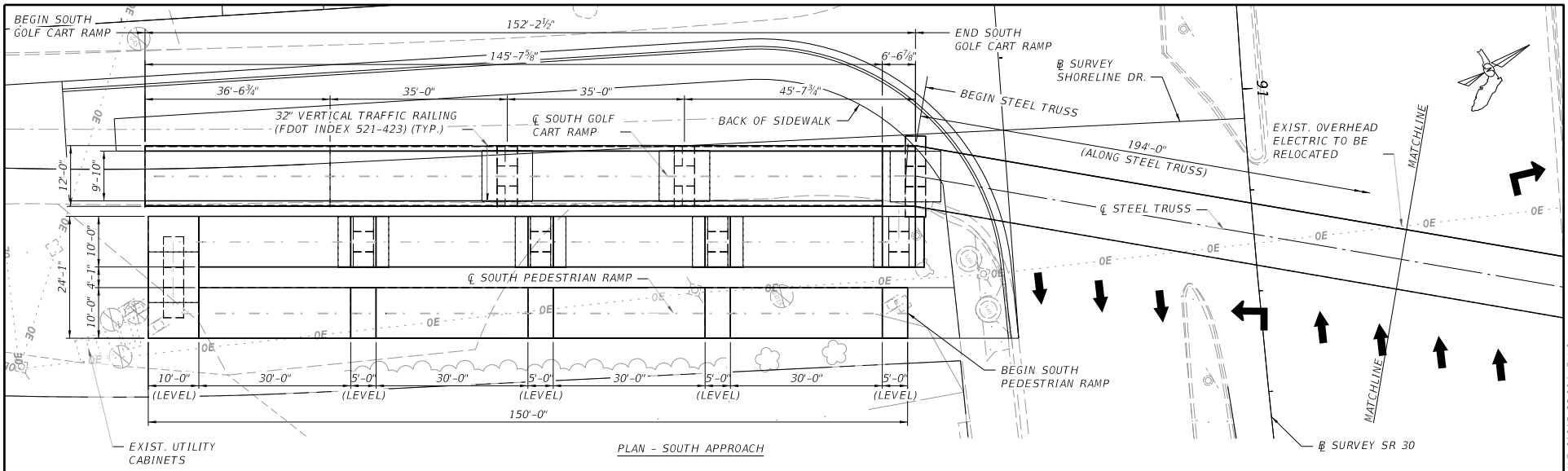

PLAN - SOUTH APPROACH

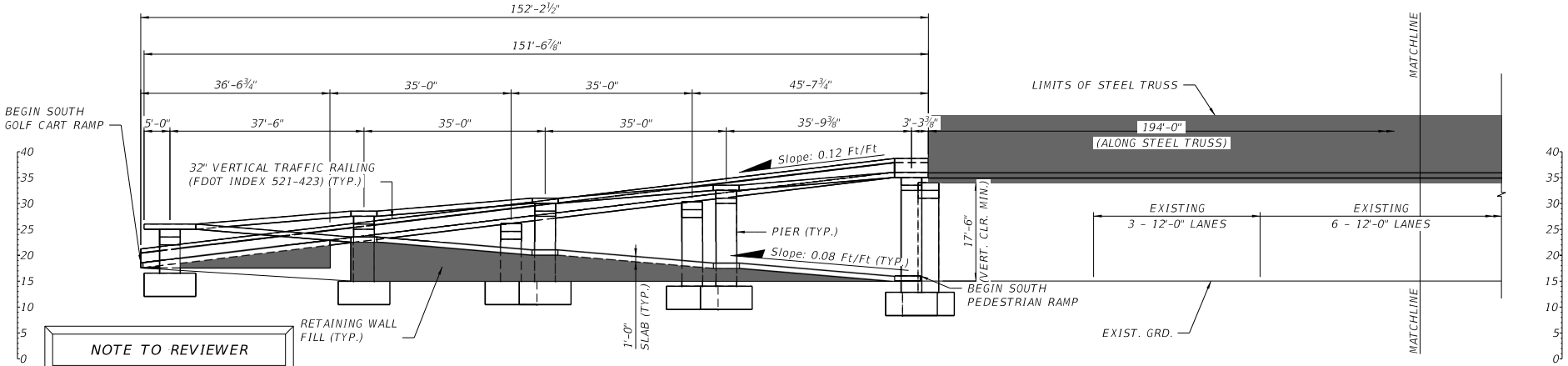

ELEVATION - SOUTH APPROACH

NOTE TO REVIEWER

PEDESTRIAN HANDRAIL NOT SHOWN. PEDESTRIAN HANDRAIL TO BE STEEL PEDESTRIAN/BICYCLE RAILING PER FDOT INDEX 515-052 (TYPE 1)

18" PRECAST PILES NOT SHOWN FOR CLARITY

####

REVISIONS					
DATE	BY	DESCRIPTION	DATE	BY	DESCRIPTION
		SUBMITTED AS CONCEPT ONLY. NOT FOR CONSTRUCTION.			

KYLE J. VARGHA
License Number: 88474
VOLKERT, INC.
1408 N. WESTSHORE BLVD.
TAMPA, FL 33607

DRAWN BY:	KJV 01-23
CHECKED BY:	CAJ 01-23
DESIGNED BY:	XXX MM-YY
CHECKED BY:	XXX MM-YY

STATE OF FLORIDA
DEPARTMENT OF TRANSPORTATION

ROAD NO.	COUNTY	FINANCIAL PROJECT ID
SR 30	SANTA ROSA	451572-1-32-01

SHEET TITLE: PLAN AND ELEVATION (1 OF 2)

PROJECT NAME: GULF BREEZE PARKWAY PEDESTRIAN BRIDGE

REF. DWG. NO.

SHEET NO. 000

1/31/2023 6:46:05 PM kylevargha
Z:\Projects\FDOT\T184300 GULF BREEZE OVERPASS\structures\B1PlanElev01.dgn

THE OFFICIAL RECORD OF THIS SHEET IS THE ELECTRONIC FILE DIGITALLY SIGNED AND SEALED UNDER RULE 61G15-23.004, F.A.C.

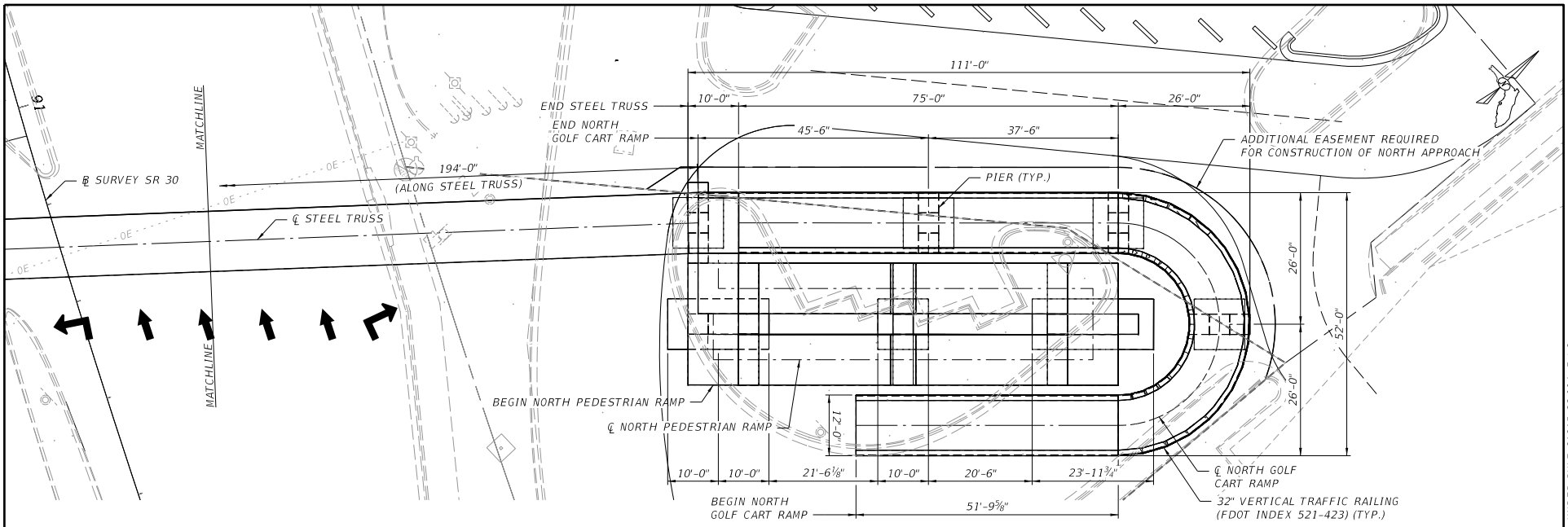

PLAN - NORTH APPROACH

NOTE TO REVIEWER

PEDESTRIAN HANDRAIL NOT SHOWN. PEDESTRIAN HANDRAIL TO BE STEEL PEDESTRIAN/BICYCLE RAILING PER FDOT INDEX 515-052 (TYPE 1)

18" PRECAST PILES NOT SHOWN FOR CLARITY

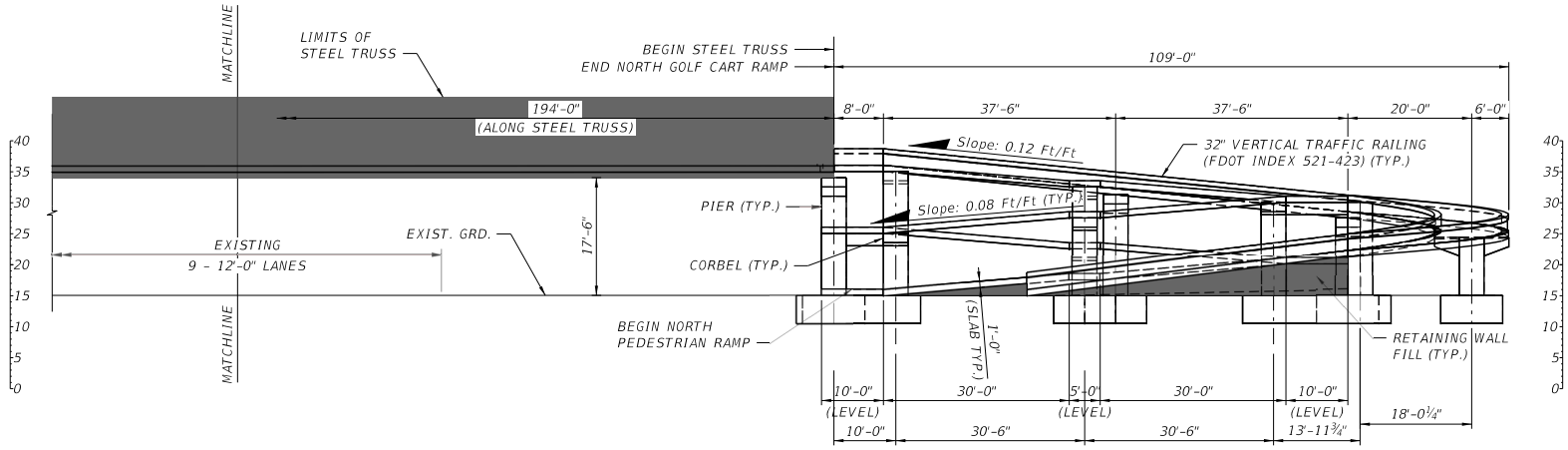

ELEVATION - NORTH APPROACH

####

REVISIONS					
DATE	BY	DESCRIPTION	DATE	BY	DESCRIPTION
		SUBMITTED AS CONCEPT ONLY. NOT FOR CONSTRUCTION.			

KYLE J. VARGHA
License Number: 88474
VOLKERT, INC.
1408 N. WESTSHORE BLVD.
TAMPA, FL 33607

DRAWN BY: KJV 01-23
CHECKED BY: CAJ 01-23
DESIGNED BY: XXX MM-YY
CHECKED BY: XXX MM-YY

STATE OF FLORIDA
DEPARTMENT OF TRANSPORTATION

ROAD NO.	COUNTY	FINANCIAL PROJECT ID
SR 30	SANTA ROSA	451572-1-32-01

SHEET TITLE: PLAN AND ELEVATION (2 OF 2)

PROJECT NAME: GULF BREEZE PARKWAY PEDESTRIAN BRIDGE

REF. DWG. NO.

SHEET NO. 000

THE OFFICIAL RECORD OF THIS SHEET IS THE ELECTRONIC FILE DIGITALLY SIGNED AND SEALED UNDER RULE 61G15-23.004, F.A.C.

1/31/2023 6:48:17 PM kylevargha
Z:\Projects\FDOT\1184300 GULF BREEZE OVERPASS\structures\B1\PlanElev02.dgn