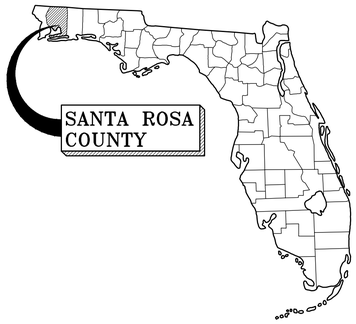


AREA MAP

# SOUNDSIDE SEPTIC TANK ELIMINATION PROGRAM - PHASE B

CITY OF GULF BREEZE
SANTA ROSA COUNTY, FLORIDA

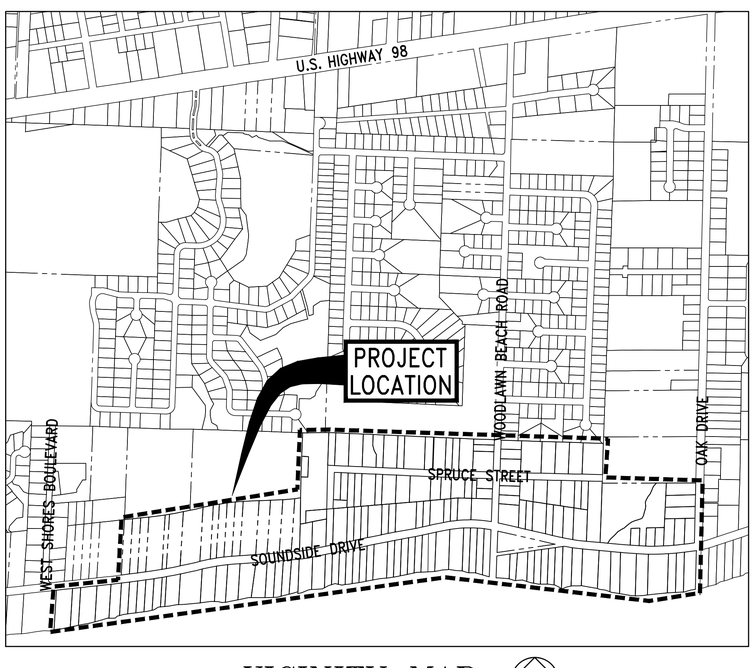


VICINITY MAP

BDI Project No. 20410.46
FEBRUARY 2022

PREPARED BY

**BASKERVILLE-DONOVAN, INC.**
Innovative Infrastructure Solutions
449 W. MAIN ST., PENSACOLA, FL 32502 (850)438-9661
ENGINEERING BUSINESS: EB-0000340

SHEET INDEX

| | |
|---|---|
| G-000 | COVER |
| G-001 | GENERAL NOTES AND ABBREVIATIONS |
| C-001 | CIVIL LEGEND |
| C-100 | SANITARY SEWER ROUTE KEY SHEET |
| C-101 | SANITARY SEWER ROUTE PLAN – SOUNDSIDE DRIVE |
| C-102 | SANITARY SEWER ROUTE PLAN – SOUNDSIDE DRIVE |
| C-103 | SANITARY SEWER ROUTE PLAN – SOUNDSIDE DRIVE |
| C-104 | SANITARY SEWER ROUTE PLAN – SOUNDSIDE DRIVE |
| C-105 | SANITARY SEWER ROUTE PLAN – SOUNDSIDE DRIVE |
| C-106 | SANITARY SEWER ROUTE PLAN – SPRUCE STREET |
| C-107 | SANITARY SEWER ROUTE PLAN – SPRUCE STREET |
| C-108 | SANITARY SEWER ROUTE PLAN – SPRUCE STREET |
| C-200 | DIRECTIONAL DRILL DETAIL AND SCHEDULE |
| C-900 | STANDARD DETAILS |
| C-901 | STANDARD DETAILS |
| C-902 | STANDARD DETAILS |
| C-903 | STANDARD DETAILS |
| C-904 | STANDARD DETAILS |
| C-905 | MAINTENANCE OF TRAFFIC DETAILS |

RELEASED FOR BID

K:\204 Gulf Breeze and SSRU\S\20410.46 Soundside STEP\DWG\C-000.dwg, Feb 02, 2022 - 10:26:49AM, toverton

## GENERAL NOTES

1. ALL WORK SHALL BE PERFORMED IN ACCORDANCE WITH THESE PLANS AND SPECIFICATIONS AND THE REQUIREMENTS AND STANDARDS OF ALL GOVERNING AUTHORITIES INCLUDING, BUT NOT LIMITED TO, THE LATEST FDOT STANDARDS, THE LATEST FDEP STANDARDS (INCLUDING THOSE FOR SEPARATION), AND CITY OF GULF BREEZE DESIGN AND CONSTRUCTION STANDARDS.

2. THE CITY SHALL OBTAIN AN FDEP PERMIT FOR THE CONSTRUCTION OF A SANITARY COLLECTION SYSTEM. THE CONTRACTOR SHALL BE RESPONSIBLE FOR THE NPDES PERMITS FOR ALL GROUND WATER DISCHARGE, ALL COUNTY RIGHT-OF-WAY PERMITS, AND ANY BUILDING PERMITS ASSOCIATED WITH THE CONSTRUCTION OF THE LIFT STATION.

3. PRIOR TO STARTING CONSTRUCTION, THE CONTRACTOR SHALL BE RESPONSIBLE TO CONFIRM THAT ALL REQUIRED PERMITS AND APPROVALS HAVE BEEN OBTAINED. NO CONSTRUCTION OR FABRICATION SHALL BEGIN UNTIL THE CONTRACTOR HAS RECEIVED AND THOROUGHLY REVIEWED ALL PLANS AND OTHER DOCUMENTS APPROVED BY ALL OF THE PERMITTING AUTHORITIES.

4. THE LOCATIONS OF UNDERGROUND UTILITIES SHOWN ON THESE PLANS ARE BASED ON INFORMATION PROVIDED BY THE UTILITIES AND ARE TO BE CONSIDERED APPROXIMATE. IT SHALL BE THE CONTRACTOR'S FULL RESPONSIBILITY TO CONTACT THE VARIOUS UTILITY COMPANIES TO LOCATE THEIR FACILITIES PRIOR TO STARTING CONSTRUCTION. NO ADDITIONAL COMPENSATION SHALL BE PAID TO THE CONTRACTOR FOR DAMAGE AND REPAIR TO THESE FACILITIES CAUSED BY HIS WORK FORCE. CONTRACTOR SHALL BE RESPONSIBLE FOR REPAIR OF ANY DAMAGED UTILITIES.

5. THE CONTRACTOR SHALL NOTIFY THE SUNSHINE STATE ONE CALL OF FLORIDA, SUPERINTENDENTS OF THE WATER, SANITARY SEWER, GAS, TELEPHONE, CABLE TELEVISION AND POWER COMPANIES 14 DAYS IN ADVANCE THAT HE INTENDS TO START WORK IN A SPECIFIC AREA. THE OWNER DISCLAIMS ANY RESPONSIBILITY FOR THE SUPPORT AND PROTECTION OF SEWERS, DRAINS, WATER PIPES, GAS PIPES, CONDUITS OF ANY KIND, UTILITIES OR OTHER STRUCTURES OWNED BY THE CITY, COUNTY, STATE OR BY PRIVATE OR PUBLIC UTILITIES OCCUPYING ANY STREET, ALLEY, PUBLIC PLACE OR RIGHT-OF-WAY.

6. PROPERTY OBSTRUCTIONS WHICH ARE TO REMAIN IN PLACE, SUCH AS BUILDINGS, SEWER DRAINS, WATER OR GAS PIPES, CONDUITS, CABLES, POLES, WALLS, POSTS, ETC., ARE TO BE CAREFULLY PROTECTED. CONTRACTOR SHALL NOTIFY ENGINEER PRIOR TO REMOVING ANY OBSTRUCTIONS NOT SPECIFICALLY NOTED ON THE PLANS.

7. RELOCATION OF OBSTRUCTIONS OWNED BY PRIVATE PROPERTY OWNERS SUCH AS MAIL BOXES AND FENCING, SHALL BE THE RESPONSIBILITY OF THE CONTRACTOR WHO MUST COORDINATE WITH THE PROPERTY OWNER.

8. CONTRACTOR SHALL MAINTAIN TRAFFIC CONTROL IN ACCORDANCE WITH FDOT STANDARD INDEX 600 (LATEST EDITION), FDOT STANDARD SPECIFICATIONS FOR ROAD AND BRIDGE CONSTRUCTION (LATEST EDITION) AND CITY OF GULF BREEZE REQUIREMENTS.

9. THE CONTRACTOR SHALL PLACE AND MAINTAIN ADEQUATE BARRICADES, CONSTRUCTION SIGNS, FLASHING LIGHTS, TORCHES, RED LANTERNS AND GUARDS DURING PROGRESS OF CONSTRUCTION WORK IN ACCORDANCE WITH APPLICABLE FDOT MUTCD INDEX.

10. THE CONTRACTOR SHALL CONDUCT ALL WORK WITHIN SANTA ROSA COUNTY RIGHT-OF-WAY IN ACCORDANCE WITH THE FDOT STANDARD SPECIFICATIONS FOR ROAD AND BRIDGE CONSTRUCTION (LATEST EDITION), FDOT ROADWAY AND TRAFFIC DESIGN STANDARDS (LATEST EDITION) AND THE FDOT UTILITY ACCOMMODATION GUIDE (LATEST EDITION). CUTTING OF PAVEMENT CANNOT BE DONE WITHOUT APPROVAL OF COUNTY ENGINEER.

11. ALL ROADWAY, SIDEWALKS, CURBS AND BASE WORK SHALL BE CONSTRUCTED IN ACCORDANCE WITH APPLICABLE CITY OF GULF BREEZE AND FDOT STANDARD SPECIFICATIONS (LATEST EDITION). MATCH EXISTING CURB TYPE.

12. ALL EXCESS FILL FROM SITE SHALL BE STOCKPILED BY THE CONTRACTOR IN A LOCATION DETERMINED BY THE OWNER OR THE OWNER'S REPRESENTATIVE AND THE ENGINEER.

13. CONTRACTOR SHALL BE FULLY RESPONSIBLE FOR CONTROL OF ALL EROSION AND SEDIMENTATION.

14. CONSTRUCTION AROUND TREES SHALL BE DONE IN A MANNER TO CAUSE MINIMUM DAMAGE TO THE TREE AND ITS ROOT SYSTEM.

15. PRIOR TO BID SUBMISSION, CONTRACTOR SHALL VISIT SITE TO FAMILIARIZE HIMSELF WITH EXISTING CONDITIONS AND THE EXTENT OF CLEARING AND GRUBBING REQUIRED.

16. ALL DIMENSIONS AND GRADES SHOWN ON THE PLANS SHALL BE FIELD VERIFIED BY THE CONTRACTOR PRIOR TO CONSTRUCTION. CONTRACTOR SHALL NOTIFY THE ENGINEER IF ANY DISCREPANCIES EXIST PRIOR TO PROCEEDING WITH CONSTRUCTION FOR NECESSARY PLAN OR GRADE CHANGES. NO EXTRA COMPENSATION SHALL BE PAID TO THE CONTRACTOR FOR WORK HAVING TO BE REDONE DUE TO DIMENSIONS OR GRADES SHOWN INCORRECTLY ON THESE PLANS IF SUCH NOTIFICATION HAS NOT BEEN GIVEN.

17. CONTRACTOR SHALL BE COMPLETELY RESPONSIBLE FOR THE LAYOUT OF THE WORK. ANY DEVIATION NOT NOTED ON THESE PLANS FROM THE PRESCRIBED ALIGNMENT, NECESSARY TO AVOID CONFLICTS, SHALL NOT BE PERMITTED WITHOUT WRITTEN PERMISSION FROM THE ENGINEER OR OWNER. ALL DEVIATIONS SHALL BE DOCUMENTED BY THE CONTRACTOR ON THE "AS-BUILT" DRAWINGS. ALL MEASUREMENTS ARE TAKEN FROM THE CENTERLINE OF THE PIPE.

18. CONTRACTOR TO COORDINATE WITH RESPONSIBLE UTILITY FOR PROTECTION/HOLDING OF UTILITY POLES, GUY WIRES AND GUY ANCHORS IN AREAS OF CONSTRUCTION.

19. CONTRACTOR SHALL BE RESPONSIBLE FOR AND COMPLY WITH ANY TESTING REQUIRED BY THE LOCAL GOVERNING AGENCY IN ADDITION TO THE TESTING REQUIREMENTS OUTLINED IN THE SPECIFICATIONS.

19. THE ENGINEER AND OWNER'S REPRESENTATIVE SHALL BE NOTIFIED A MINIMUM OF 48 HOURS IN ADVANCE OF THE PRESSURE AND LEAKAGE TEST. THE PRESSURE TEST SHALL BE PERFORMED IN ACCORDANCE WITH AWWA STANDARDS.

20. CONTRACTOR TO MAINTAIN ACCESS TO ALL PROPERTIES WITHIN PROJECT AREA AT ALL TIMES.

21. MINIMUM GROUND COVER OVER PROPOSED SEWER IS 36" UNLESS OTHERWISE NOTED OR APPROVED.

22. MAINTENANCE OF EXISTING AND SETTING OF NEW HORIZONTAL AND VERTICAL CONTROLS SHALL BE THE CONTRACTOR'S RESPONSIBILITY.

23. CONTRACTOR SHALL PROVIDE TO EACH PROPERTY OWNER AND THE CITY OF GULF BREEZE 2 WEEKS WRITTEN NOTICE PRIOR TO THE START OF CONSTRUCTION ADJACENT TO, OR WITHIN, THEIR PROPERTY. NOTICE SHALL INCLUDE CONTRACTOR'S NAME, ADDRESS, PHONE NUMBER AND SITE SUPERINTENDENT'S NAME AND CELL PHONE NUMBER FOR EMERGENCY CONTACT.

24. CONTRACTOR SHALL REINSTALL/REPLACE/REPAIR ALL FENCES AND LANDSCAPING TEMPORARILY REMOVED OR DAMAGED DURING CONSTRUCTION WHETHER SHOWN ON PLANS OR NOT. VARIATIONS FROM RESTORATION TO ORIGINAL CONDITION SHALL BE APPROVED BY RESIDENT AND DOCUMENTED FOR THE CITY.

25. SEPTIC TANK/GREY WATER TANK ABANDONMENT:

    A. CONTRACTOR SHALL OBTAIN APPROPRIATE PERMITS FROM SANTA ROSA COUNTY DEPARTMENT OF HEALTH. DOCUMENTATION OF PERMIT AND FINAL INSPECTION BY THE HEALTH DEPARTMENT SHALL BE PROVIDED TO THE CITY.

    B. CONTRACTOR SHALL HAVE EACH SEPTIC TANK PUMPED OUT AND CONTENTS PROPERLY DISPOSED OF.

    C, CONTRACTOR SHALL REMOVE AND PROPERLY DISPOSE OF SEPTIC TANK TOP SECTIONS.

    D. CONTRACTOR SHALL BREAK OUT THE BOTTOM OF EACH SEPTIC TANK.

    E. CONTRACTOR SHALL BREAK OUT THE TOP 3' OF THE SEPTIC TANK WALL AND REMOVE.

    F. CONTRACTOR SHALL BACKFILL ALL VOIDS AND COMPACT IN 12" LIFTS. WET SOIL AS REQUIRED BY GEOTECHNICAL REPORT TO ACHIEVE COMPACTION.

    G. CONTRACTOR SHALL SOD AS REQUIRED TO MATCH EXISTING YARD.

26. ALL VALVE BOXES SHALL BE SET FLUSH AND TO FINISH GRADE. ALL BOXES SHALL BE MARKED AS "SEWER".

27. IT SHALL BE THE CONTRACTOR'S RESPONSIBILITY TO COORDINATE THE LOCATION OF SEPTIC TANKS WITH EACH PROPERTY OWNER OR THEIR DESIGNATED REPRESENTATIVE AND IDENTIFY THE BEST ROUTE TO INSTALL SEWER LATERAL FROM HOUSE TO RIGHT-OF-WAY. SEWER LATERAL STUB-OUTS ARE SHOWN ON THE DRAWING BUT SHALL BE FIELD LOCATED BASED ON CONTRACTOR'S NEGOTIATION WITH THE PROPERTY OWNER.

28. ALL DISTURBED DRIVEWAYS SHALL BE REMOVED TO THE NEAREST EXPANSION JOINT OR SAW CUT TO BEYOND THE APRON. MINIMUM WIDTH OF SAW CUT SHALL BE 5'. DRIVEWAYS SHALL BE RESTORED WITH LIKE MATERIALS. TRANSITION FROM DRIVEWAY TO ASPHALT ROADWAY SHALL BE FLUSH. FOR OVERLAYS AT UNDISTURBED DRIVEWAYS, CONTRACTOR SHALL SAW CUT APRON BACK MINIMUM 2' FROM EDGE OF PAVEMENT. AFTER ROAD OVERLAY, CONTRACTOR SHALL RESTORE DRIVEWAY WITH LIKE MATERIALS SO THAT JOINT WITH ASPHALT IS FLUSH.

29. CONTRACTOR TO REPAIR/REPLACE ALL DAMAGED DRIVEWAY CULVERTS.

30. CONTRACTOR IS REQUIRED TO COMMUNICATE ROAD CLOSURES TO EMERGENCY SERVICES, THE SCHOOL SYSTEM FOR BUS ROUTING AND SANITATION SERVICES.

31. EXISTING STORMWATER IMPROVEMENTS, INCLUDING STORMWATER PIPE WITH GRAVEL BED AND SOCK SHALL BE PROTECTED. DAMAGED SECTIONS SHALL BE REPAIRED/REPLACED INCIDENTAL TO THE PROJECT.

32. CONTRACTOR SHALL PROVIDE 12 GAUGE LOCATOR WIRE FOR ALL BELOW GRADE PIPING. WHERE APPLICABLE, ALL TAPE SHALL BE MANUFACTURED BY THOR ENTERPRISES, INC. SUN PRAIRIE, WI, OR SETON NAMEPLATE CORPORATION, NEW HAVEN, CT, OR APPROVED EQUIVALENT.

33. NO WORK SHALL BE PERFORMED ON SATURDAY OR SUNDAY WITHOUT WRITTEN APPROVAL FROM THE CITY.

34. CONTRACTOR TO PROVIDE PRE-CONSTRUCTION VIDEO BEFORE CONSTRUCTION BEGINS. CONTRACTOR SHALL ALSO PROVIDE A POST CONSTRUCTION VIDEO WITH REQUEST FOR FINAL PAYMENT.

35. CONTRACTOR TO PROVIDE ENGINEER WITH A COMPLETE SET OF "RECORD DRAWINGS", INCLUDING BUT NOT LIMITED TO, FINISHED GRADES, LOCATION AND INVERTS OF ALL STRUCTURES AND UTILITIES.

36. CONSTRUCTION INSPECTION WILL BE PROVIDED BY THE OWNER'S REPRESENTATIVE. THE CONTRACTOR SHALL NOTIFY THE OWNER AT LEAST 48 HOURS PRIOR TO BEGINNING CONSTRUCTION AND AT LEAST 48 HOURS BEFORE REQUIRING INSPECTION ON EACH AND EVERY PHASE OF WORK. NO FINAL TESTING OR PRESSURE TESTING WILL BE ACCEPTED UNLESS WITNESSED BY THE OWNER'S REPRESENTATIVE.

37. ANY SURVEY MONUMENTATION DISTURBED DURING CONSTRUCTION SHALL BE REPLACED UPON COMPLETION OF THE WORK BY A REGISTERED LAND SURVEYOR.

38. PLANS AND SPECIFICATIONS REQUIRE THAT COMPACT BACKFILL BE PLACED ALONG SIDE OF AND OVER ALL UTILITIES. THE ENGINEER MAY REQUIRE THAT COMPACTION TESTS BE TAKEN TO VERIFY BACKFILL COMPACTION. THE COST OF SUCH COMPACTION TESTS WILL BE BORNE BY THE CONTRACTOR.

39. THE CONTRACTOR IS RESPONSIBLE FOR THE PROTECTION OF ALL TREES, MONITORING WELLS, STRUCTURES AND UTILITIES NOT MARKED FOR REMOVAL OR DEMOLITION AND SHALL PROMPTLY REPAIR ANY DAMAGE AS DIRECTED BY THE ENGINEER AT NO COST TO THE OWNER.

40. CONTRACTOR SHALL REMOVE ALL UNSALVAGEABLE MATERIALS AND YARD WASTE FROM THE SITE IMMEDIATELY AND DISPOSE OF IN ACCORDANCE WITH ALL APPLICABLE FEDERAL, STATE AND LOCAL REGULATIONS.

## ABBREVIATION LEGEND

| | |
|---|---|
| # | NUMBER |
| & | AND |
| @ | AT |
| APPROX | APPROXIMATE (LY) |
| ARV | AIR RELEASE VALVE |
| AVE | AVENUE |
| B/ | BOTTOM OF |
| BLDG | BUILDING |
| BM | BENCHMARK |
| CAP | CAPACITY |
| CLR | CLEAR |
| CMP | CORRUGATED METAL PIPE |
| CO | CLEAN OUT |
| CONC | CONCRETE |
| CTR | CENTER (ED) |
| DEPT | DEPARTMENT |
| DI | DUCTILE IRON |
| DIA | DIAMETER |
| DIP | DUCTILE IRON PIPE |
| DSY | DOUBLE SOLID YELLOW LINE |
| E | EAST |
| ECP | REINFORCED CONCERETE PIPE |
| EL | ELEVATION |
| ELEC | ELECTRIC(AL) |
| EOP | EDGE OF PAVEMENT |
| EQIV | EQUIVALENT |
| ERCP | ELLIPTICAL REINFORCED CONCRETE PIPE |
| EX, EXIST | EXISTING |
| FDOT | FLORIDA DEPARTMENT OF TRANSPORTATION |
| FF | FINISH FLOOR |
| FH | FIRE HYDRANT |
| FLG | FLANGE |
| FM | FORCE MAIN |
| FT | FEET/FOOT |
| GA | GAUGE |
| G | GAS |
| H | HORIZONTAL |
| ID | INSIDE DIAMETER |
| IN | INCH |
| INV | INVERT |
| L | LENGTH |
| LBS | POUNDS |
| LF | LINEAR FEET |
| LG | LONG |
| LR | LONG RADIUS |
| LT | LEFT |
| MAX | MAXIMUM |
| MES | MITERED END SECTION |
| MFR | MANUFACTURER |
| MH | MANHOLE |
| MIN | MINIMUM |
| MJ | MECHANICAL JOINT |
| NTS | NOT TO SCALE |
| NO | NUMBER |
| OC | ON CENTER |
| OD | OUTSIDE DIAMETER |
| OHE | OVERHEAD ELECTRIC |
| PS | PUMP STATION |
| PVC | POLYVINYL CHLORIDE PIPE |
| PVMT | PAVEMENT |
| PW | POTABLE WATER |
| R/W | RIGHT-OF-WAY |
| RCP | REINFORCED CONCRETE PIPE |
| RED | REDUCER |
| REQ'D | REQUIRED |
| RT | RIGHT |
| SAN | SANITARY SEWER |
| SBW | SINGLE BROKEN WHITE LINE |
| SBY | SINGLE BROKEN YELLOW LINE |
| SD | STORM DRAIN |
| SHT | SHEET |
| SS | STAINLESS STEEL OR SANITARY SEWER |
| SSW | SINGLE SOLID WHITE LINE |
| ST | STORM INLET |
| STA | STATION |
| STD | STANDARD |
| T/ | TOP OF |
| TBM | TEMPORARY BENCH MARK |
| TEMP | TEMPORARY |
| TOS | TOP OF SLAB |
| TOW | TOP OF WALL |
| TYP | TYPICAL |
| VERT | VERTICAL |
| VOL | VOLUME |
| W | WIDTH OR WATER |
| W/ | WITH |
| W/O | WITHOUT |
| WM | WATER MAIN |
| WWF | WELDED WIRE FABRIC |


BASKERVILLE-DONOVAN, INC.
Innovative Infrastructure Solutions
449 W. MAIN ST., PENSACOLA, FL 32502 (850)438-9661
ENGINEERING BUSINESS: EB-0000340
Pensacola - Panama City Beach - Tallahassee - Mobile



This drawing is the property of BASKERVILLE-DONOVAN, INC. and is not to be reproduced in whole or in part. It is not to be used on any other project and is to be returned upon request.



JAMES E. ANDERSON, P.E.
FL Reg. Engineer #67494


SSRUS SOUNDSIDE SEPTIC TANK ELIMINATION PROGRAM PHASE B
SANTA ROSA COUNTY, FLORIDA

| NO. | DATE | APPR. | REVISION/ACTION TAKEN |
|---|---|---|---|
| 1 | 02/22 | JEA | RELEASED FOR BID |

NOT RELEASED FOR CONSTRUCTION BY DATE

PROJECT NO: 20410.46
DESIGNED BY: KMS
DRAWN BY: THO
CHK'D BY: JEA
PROJ. MGR: RWD
DATE: FEBRUARY 2022

GENERAL NOTES AND ABBREVIATION LEGEND

G-001


K:\204 Gulf Breeze and SSRUS\20410.46 Soundside STEP\DWG\G-001.dwg, Mar 09, 2022 - 10:36:47AM, toverton

# CIVIL LEGEND

## UTILITY SYMBOLS

| FEATURE | SYMBOL |
|---|---|
| UNSIZED STORM DRAIN | SD |
| UNSIZED SAN. SEWER MAIN | SAN |
| IDENTIFIED SAN. SEWER MAIN | 8"SAN |
| UNSIZED FORCE MAIN | FM |
| IDENTIFIED FORCE MAIN | 3"FM |
| UNSIZED GAS MAIN | G |
| IDENTIFIED GAS MAIN | 4"G |
| IDENTIFIED WATER LINE | 4"W |
| WATER CONNECTION LINE | W |
| OVERHEAD ELECTRIC | O/E |
| FIBER OPTIC CABLE | FOC |
| BURIED TELEPHONE | BT |
| BURIED ELECTRIC | BE |
| ABANDON-IN-PLACE | / |

| | |
|---|---|
| UTILITY POLE | |
| UTILITY POLE W/ GUY | |
| CONCRETE POWER POLE | |
| TELEPHONE PEDESTAL | T |
| FIBER OPTIC BOX | FO |
| FIBER OPTIC MARKER | F |
| LIGHT POLE | |
| CABLE TV JUNCTION BOX | C |
| ELECTRICAL JUNCTION BOX | E |
| TRAFFIC SIGNAL CONTROL BOX | TS |
| FUSEBOX | F |
| SEWER VALVE | SV |
| GAS VALVE | GV |
| WATER VALVE | WV |
| EXIST. FIRE HYDRANT ASSEMBLY | |
| WATER METER | WM |
| SANITARY SEWER MANHOLE | SMH |
| STORM DRAIN MANHOLE | DMH |
| STORMWATER PIPE; SIZE & TYPE | 12" CMP |

NOTE:

SANITARY SEWER MANHOLES ARE SHOWN LARGER THAN SCALE ON PLANS FOR CLARITY

## MISCELLANEOUS SYMBOLS

| FEATURE | SYMBOL |
|---|---|
| MAILBOX | |
| SIGN | |
| STREET NAME SIGN | |
| BLDG OR STRUCTURE FOOTPRINT | |
| CONTOUR LINE | 27 |
| PROJECT ADDRESS OR NAME | 4671 |

## BOUNDARY AND MARKER SYMBOLS

| FEATURE | SYMBOL |
|---|---|
| WIRE FENCE | <> |
| CHAIN LINK FENCE | X |
| WOOD FENCE | // |
| PROPERTY LINE | PL |
| RIGHT OF WAY (R/W) | |
| CENTERLINE | ℄ |

| | |
|---|---|
| FOUND 4"x4" CONCRETE MONUMENT WITH NUMBER | #2433 |
| FOUND 4"x4" CONCRETE MONUMENT, UNNUMBERED | |
| FOUND 3" DIA. CONCRETE MONUMENT (UNNUMBERED) | |
| FOUND FDOT CONCRETE MONUMENT | |
| FOUND 1/2" CAPPED IRON ROD WITH NUMBER | #6112 |
| FOUND 1/2" IRON ROD (UNNUMBERED) | |
| FOUND 1" IRON PIPE, UNNUMBERED | |
| FOUND 2" IRON PIPE (GULF POWER) | |

## PIPING SYMBOLS

| NEW | FEATURE | EXISTING |
|---|---|---|
| | DIRECTION OF FLOW | |
| | 90° BEND | |
| | 90° BEND TURNED DOWN | |
| | 90° BEND TURNED UP | |
| | 45° BEND | |
| | 45° BEND TURNED DOWN | |
| | 45° BEND TURNED UP | |
| | 22 1/2° BEND | |
| | 22 1/2° BEND TURNED DOWN | |
| | 22 1/2° BEND TURNED UP | |
| | CONCENTRIC REDUCER | |
| | ECCENTRIC REDUCER | |
| | PLUG OR BLIND FLANGE | |
| | TEE | |
| | TEE TURNED DOWN | |
| | CROSS | |
| | TEE TURNED UP | |
| | WYE | |
| | WYE TURNED UP | |

## PAVEMENT SYMBOLS

- ASPHALT PAVEMENT
- CONCRETE OR ASPHALT PATCH
- ASPHALT OVERLAY
- DIRT/GRAVEL PATCH
- CONCRETE PAVEMENT
- GRAVEL

## DRAWING, SECTION AND DETAIL TITLES

DETAIL LETTER

XX DETAIL NAME HERE

SCALE:


BASKERVILLE-DONOVAN, INC.
Innovative Infrastructure Solutions
449 W. MAIN ST., PENSACOLA, FL 32502 (850)438-9661
ENGINEERING BUSINESS: EB-0000340
Pensacola - Panama City Beach - Tallahassee - Mobile



This drawing is the property of BASKERVILLE-DONOVAN, INC. and is not to be reproduced in whole or in part. It is not to be used on any other project and is to be returned upon request.


JAMES E. ANDERSON, P.E.
FL Reg. Engineer #67494

SSRUS SOUNDSIDE SEPTIC TANK ELIMINATION PROGRAM PHASE B
SANTA ROSA COUNTY, FLORIDA

| NO. | DATE | APPR. | REVISION/ACTION TAKEN |
|---|---|---|---|
| 1 | 01/22 | JEA | RELEASED FOR BID |

NOT RELEASED FOR CONSTRUCTION BY DATE

PROJECT NO: 20410.46
DESIGNED BY: KMS
DRAWN BY: THO
CHK'D BY: JEA
PROJ. MGR: RWD
DATE: JANUARY 2022

CIVIL LEGEND

C-001


K:\204 Gulf Breeze and SSRUS\20410.46 Soundside STEP\DWG\C-001.dwg, Jan 13, 2022 - 3:01:40PM, toverton

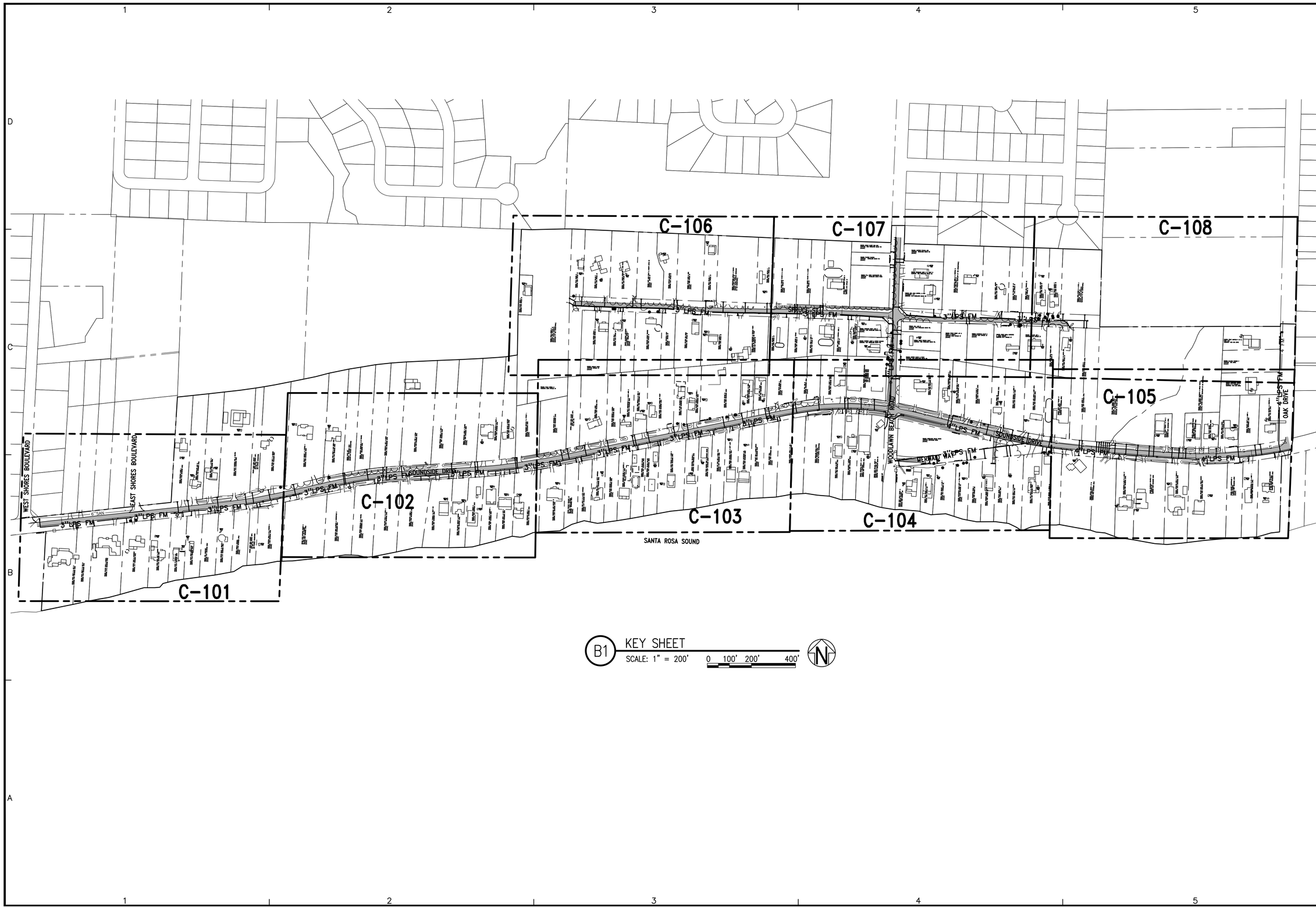



BASKERVILLE-DONOVAN, INC.
Innovative Infrastructure Solutions
449 W. MAIN ST., PENSACOLA, FL 32502 (850)438-9661
ENGINEERING BUSINESS: EB-0000340
Pensacola - Panama City Beach - Tallahassee - Mobile



This drawing is the property of BASKERVILLE-DONOVAN, INC. and is not to be reproduced in whole or in part. It is not to be used on any other project and is to be returned upon request.


JAMES E. ANDERSON, P.E.
FL Reg. Engineer #67494

SSRUS SOUNDSIDE
SEPTIC TANK
ELIMINATION PROGRAM
PHASE B
SANTA ROSA COUNTY, FLORIDA

| NO. | DATE | APPR. | REVISION/ACTION TAKEN |
|---|---|---|---|
| 1 | 01/22 | JEA | RELEASED FOR BID |

NOT RELEASED FOR CONSTRUCTION BY DATE

PROJECT NO: 20410.46
DESIGNED BY: KMS
DRAWN BY: THO
CHK'D BY: JEA
PROJ. MGR: RWD
DATE: JANUARY 2022

SANITARY SEWER ROUTE
KEY SHEET

C-100

K:\204 Gulf Breeze and SSRUS\20410.46 Soundside STEP\DWG\C-100.dwg, Feb 02, 2022 - 10:32:22AM, toverton

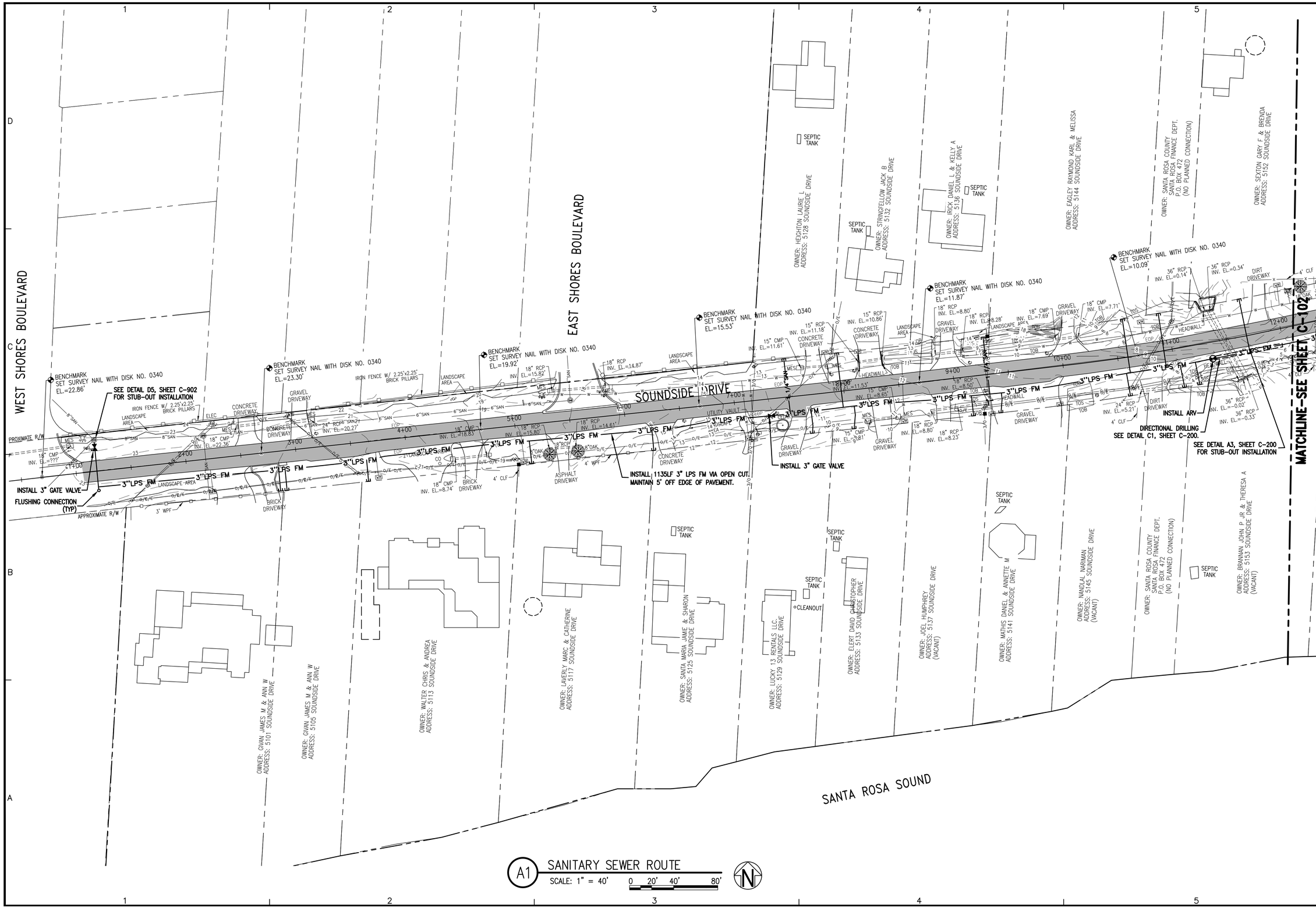


**BASKERVILLE-DONOVAN, INC.**
**Innovative Infrastructure Solutions**
449 W. MAIN ST., PENSACOLA, FL 32502 (850)438-9661
ENGINEERING BUSINESS: EB-0000340
Pensacola - Panama City Beach - Tallahassee - Mobile

This drawing is the property of BASKERVILLE–DONOVAN, INC. and is not to be reproduced in whole or in part. It is not to be used on any other project and is to be returned upon request.

JAMES E. ANDERSON, P.E.
FL Reg. Engineer #67494

# SSRUS SOUNDSIDE SEPTIC TANK ELIMINATION PROGRAM PHASE B

SANTA ROSA COUNTY, FLORIDA

| NO. | DATE | APPR. | REVISION/ACTION TAKEN |
|---|---|---|---|
| 1 | 02/22 | JEA | RELEASED FOR BID |

NOT RELEASED FOR CONSTRUCTION BY DATE

PROJECT NO: 20410.46
DESIGNED BY: KMS
DRAWN BY: THO
CHK'D BY: JEA
PROJ. MGR: RWD
DATE: FEBRUARY 2022

## SANITARY SEWER ROUTE SOUNDSIDE DRIVE

C–101

K:\204 Gulf Breeze and SSRUS\20410.46 Soundside STEP\DWG\C–100.dwg, Mar 09, 2022 – 10:41:21AM, toverton

K:\204 Gulf Breeze and SSRUS\20410.46 Soundside STEP\DWG\C-100.dwg, Mar 09, 2022 - 10:44:46AM, toverton

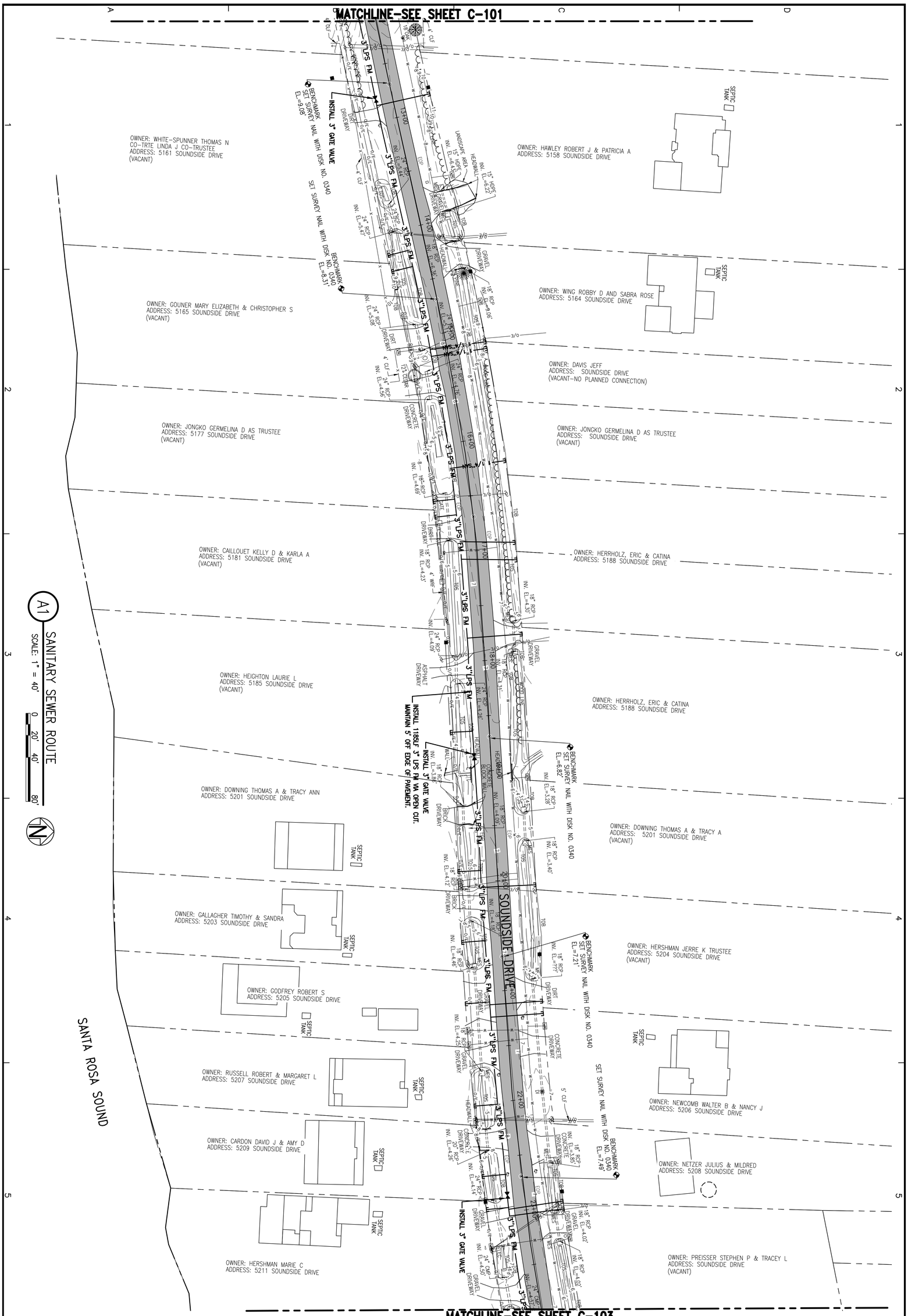


| | | | | | | |
|---|---|---|---|---|---|---|
| C-102 | SANITARY SEWER ROUTE SOUNDSIDE DRIVE | PROJECT NO: 20410.46 | NO. | DATE | APPR. | REVISION/ACTION TAKEN |
| | | DESIGNED BY: KMS | 1 | 02/22 | JEA | RELEASED FOR BID |
| | | DRAWN BY: THO | | | | |
| | | CHK'D BY: JEA | | | | |
| | | PROJ. MGR: RWD | | | | |
| | | DATE: FEBRUARY 2022 | NOT RELEASED FOR CONSTRUCTION BY DATE | | | |

SSRUS SOUNDSIDE SEPTIC TANK ELIMINATION PROGRAM PHASE B
SANTA ROSA COUNTY, FLORIDA

JAMES E. ANDERSON, P.E.
FL Reg. Engineer #67494


BASKERVILLE-DONOVAN, INC.
Innovative Infrastructure Solutions
449 W. MAIN ST., PENSACOLA, FL 32502 (850)438-9661
ENGINEERING BUSINESS: EB-0000340
Pensacola - Panama City Beach - Tallahassee - Mobile



*This drawing is the property of BASKERVILLE-DONOVAN, INC. and is not to be reproduced in whole or in part. It is not to be used on any other project and is to be returned upon request.*

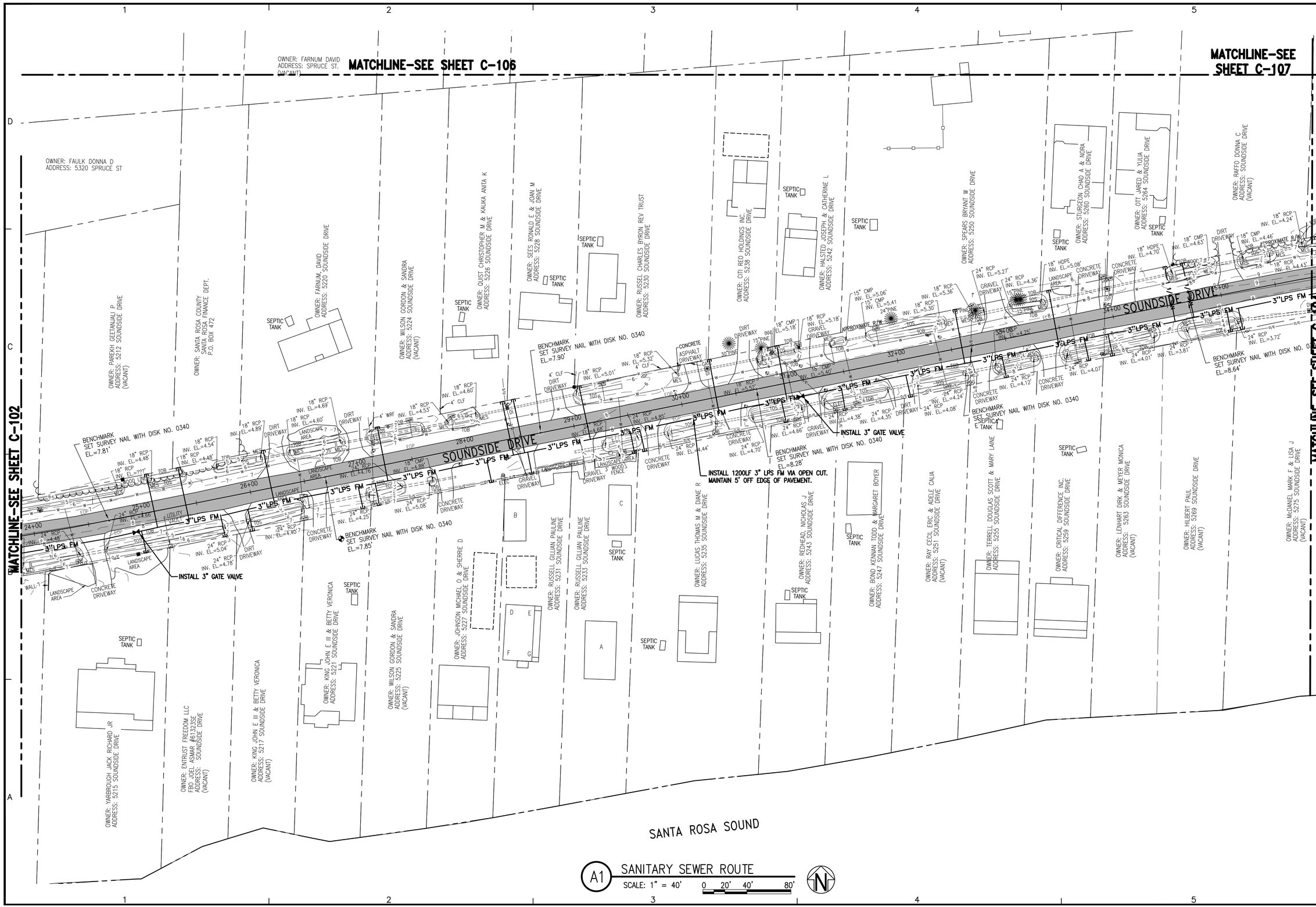


A1 SANITARY SEWER ROUTE
SCALE: 1" = 40' 0 20' 40' 80'

**BASKERVILLE-DONOVAN, INC.**
Innovative Infrastructure Solutions
449 W. MAIN ST., PENSACOLA, FL 32502 (850)438-9661
ENGINEERING BUSINESS: EB-0000340
Pensacola - Panama City Beach - Tallahassee - Mobile

This drawing is the property of BASKERVILLE-DONOVAN, INC. and is not to be reproduced in whole or in part. It is not to be used on any other project and is to be returned upon request.

JAMES E. ANDERSON, P.E.
FL Reg. Engineer #67494

# SSRUS SOUNDSIDE SEPTIC TANK ELIMINATION PROGRAM PHASE B

SANTA ROSA COUNTY, FLORIDA

| NO. | DATE | APPR. | REVISION/ACTION TAKEN |
|---|---|---|---|
| 1 | 02/22 | JEA | RELEASED FOR BID |

NOT RELEASED FOR CONSTRUCTION BY DATE

PROJECT NO: 20410.46
DESIGNED BY: KMS
DRAWN BY: THO
CHK'D BY: JEA
PROJ. MGR: RWD
DATE: FEBRUARY 2022

## SANITARY SEWER ROUTE SOUNDSIDE DRIVE

C-103

K:\204 Gulf Breeze and SSRUS\20410.46 Soundside STEP\DWG\C-100.dwg, Feb 08, 2022 - 2:28:53PM, toverton

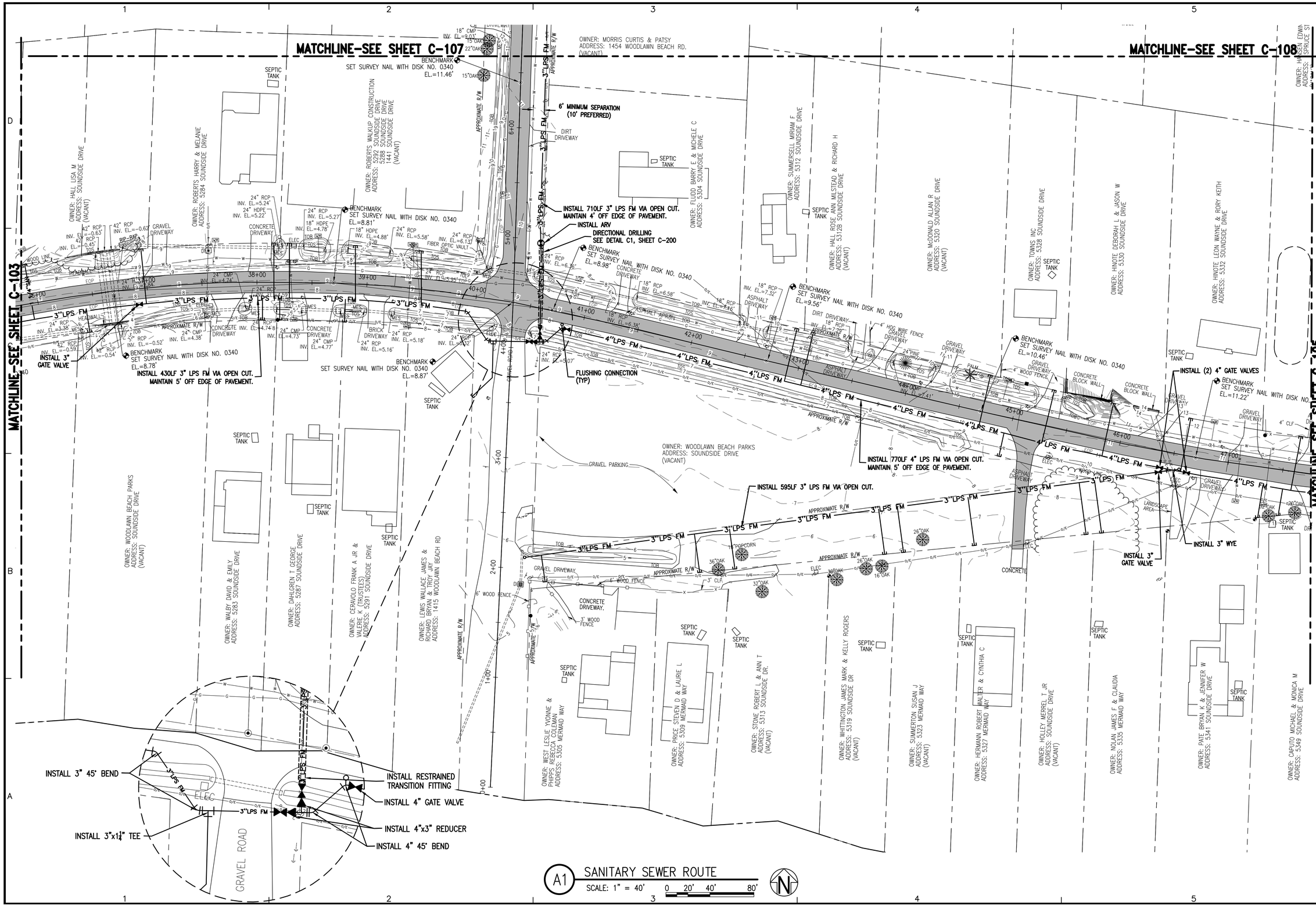


**BASKERVILLE-DONOVAN, INC.**
Innovative Infrastructure Solutions
449 W. MAIN ST., PENSACOLA, FL 32502 (850)438-9661
ENGINEERING BUSINESS: EB-0000340
Pensacola - Panama City Beach - Tallahassee - Mobile

This drawing is the property of BASKERVILLE-DONOVAN, INC. and is not to be reproduced in whole or in part. It is not to be used on any other project and is to be returned upon request.

JAMES E. ANDERSON, P.E.
FL Reg. Engineer #67494

# SSRUS SOUNDSIDE SEPTIC TANK ELIMINATION PROGRAM PHASE B

SANTA ROSA COUNTY, FLORIDA

| NO. | DATE | APPR. | REVISION/ACTION TAKEN |
|---|---|---|---|
| 1 | 02/22 | JEA | RELEASED FOR BID |

NOT RELEASED FOR CONSTRUCTION BY DATE

PROJECT NO: 20410.46
DESIGNED BY: KMS
DRAWN BY: THO
CHK'D BY: JEA
PROJ. MGR: RWD
DATE: FEBRUARY 2022

## SANITARY SEWER ROUTE SOUNDSIDE DRIVE

C-104

K:\204 Gulf Breeze and SSRUS\20410.46 Soundside STEP\DWG\C-100.dwg, Mar 09, 2022 - 2:46:33PM, toverton

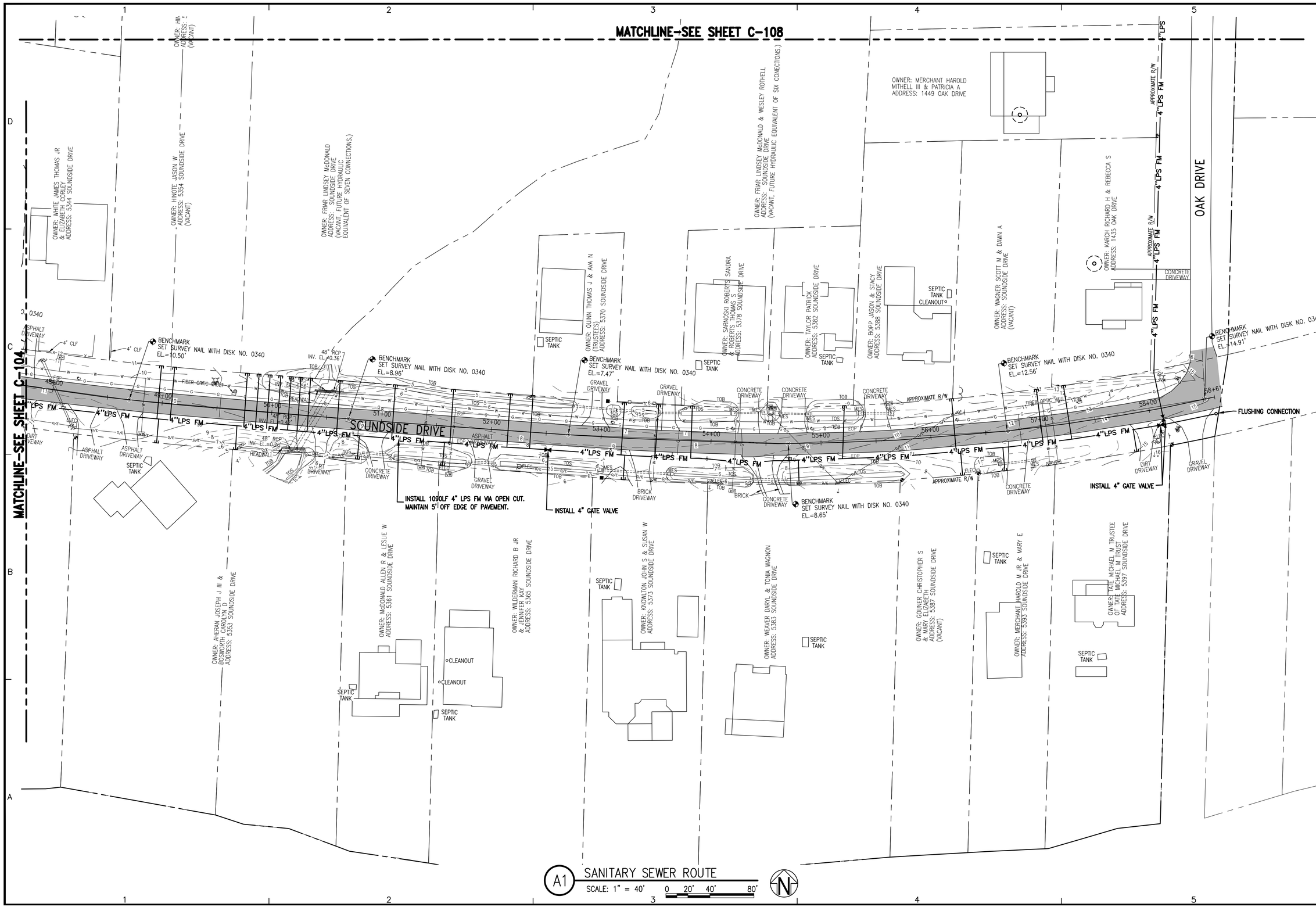


**BASKERVILLE-DONOVAN, INC.**
Innovative Infrastructure Solutions
449 W. MAIN ST., PENSACOLA, FL 32502 (850)438-9661
ENGINEERING BUSINESS: EB-0000340
Pensacola - Panama City Beach - Tallahassee - Mobile

This drawing is the property of BASKERVILLE-DONOVAN, INC. and is not to be reproduced in whole or in part. It is not to be used on any other project and is to be returned upon request.

JAMES E. ANDERSON, P.E.
FL Reg. Engineer #67494

SSRUS SOUNDSIDE SEPTIC TANK ELIMINATION PROGRAM PHASE B
SANTA ROSA COUNTY, FLORIDA

| NO. | DATE | APPR. | REVISION/ACTION TAKEN |
|---|---|---|---|
| 1 | 02/22 | JEA | RELEASED FOR BID |

NOT RELEASED FOR CONSTRUCTION BY DATE

PROJECT NO: 20410.46
DESIGNED BY: KMS
DRAWN BY: THO
CHK'D BY: JEA
PROJ. MGR: RWD
DATE: FEBRUARY 2022

SANITARY SEWER ROUTE SOUNDSIDE DRIVE

C-105

K:\204 Gulf Breeze and SSRUS\20410.46 Soundside STEP\DWG\C-100.dwg, Mar 09, 2022 - 1:56:18PM, tovrton

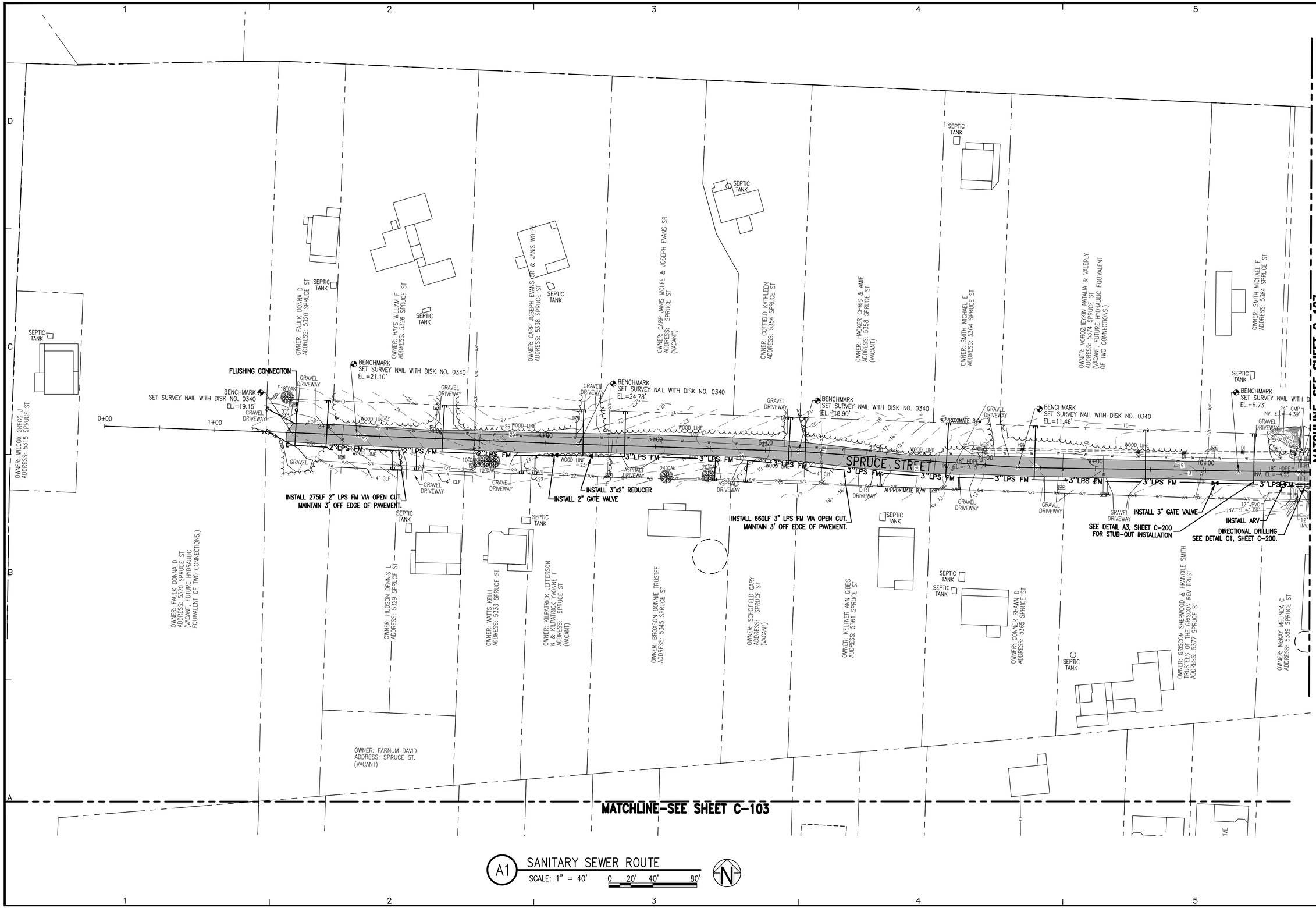


**BASKERVILLE-DONOVAN, INC.**
**Innovative Infrastructure Solutions**
449 W. MAIN ST., PENSACOLA, FL 32502 (850)438-9661
ENGINEERING BUSINESS: EB-0000340
Pensacola - Panama City Beach - Tallahassee - Mobile

This drawing is the property of BASKERVILLE-DONOVAN, INC. and is not to be reproduced in whole or in part. It is not to be used on any other project and is to be returned upon request.

JAMES E. ANDERSON, P.E.
FL Reg. Engineer #67494

SSRUS SOUNDSIDE
SEPTIC TANK
ELIMINATION PROGRAM
PHASE B
SANTA ROSA COUNTY, FLORIDA

| NO. | DATE | APPR. | REVISION/ACTION TAKEN |
|---|---|---|---|
| 1 | 02/22 | JEA | RELEASED FOR BID |

NOT RELEASED FOR CONSTRUCTION BY DATE

PROJECT NO: 20410.46
DESIGNED BY: KMS
DRAWN BY: THO
CHK'D BY: JEA
PROJ. MGR: RWD
DATE: FEBRUARY 2022

SANITARY SEWER ROUTE
SOUNDSIDE DRIVE

C-106

K:\204 Gulf Breeze and SSRUS\20410.46 Soundside STEP\DWG\C-100.dwg, Mar 09, 2022 - 2:52:57PM, toverton

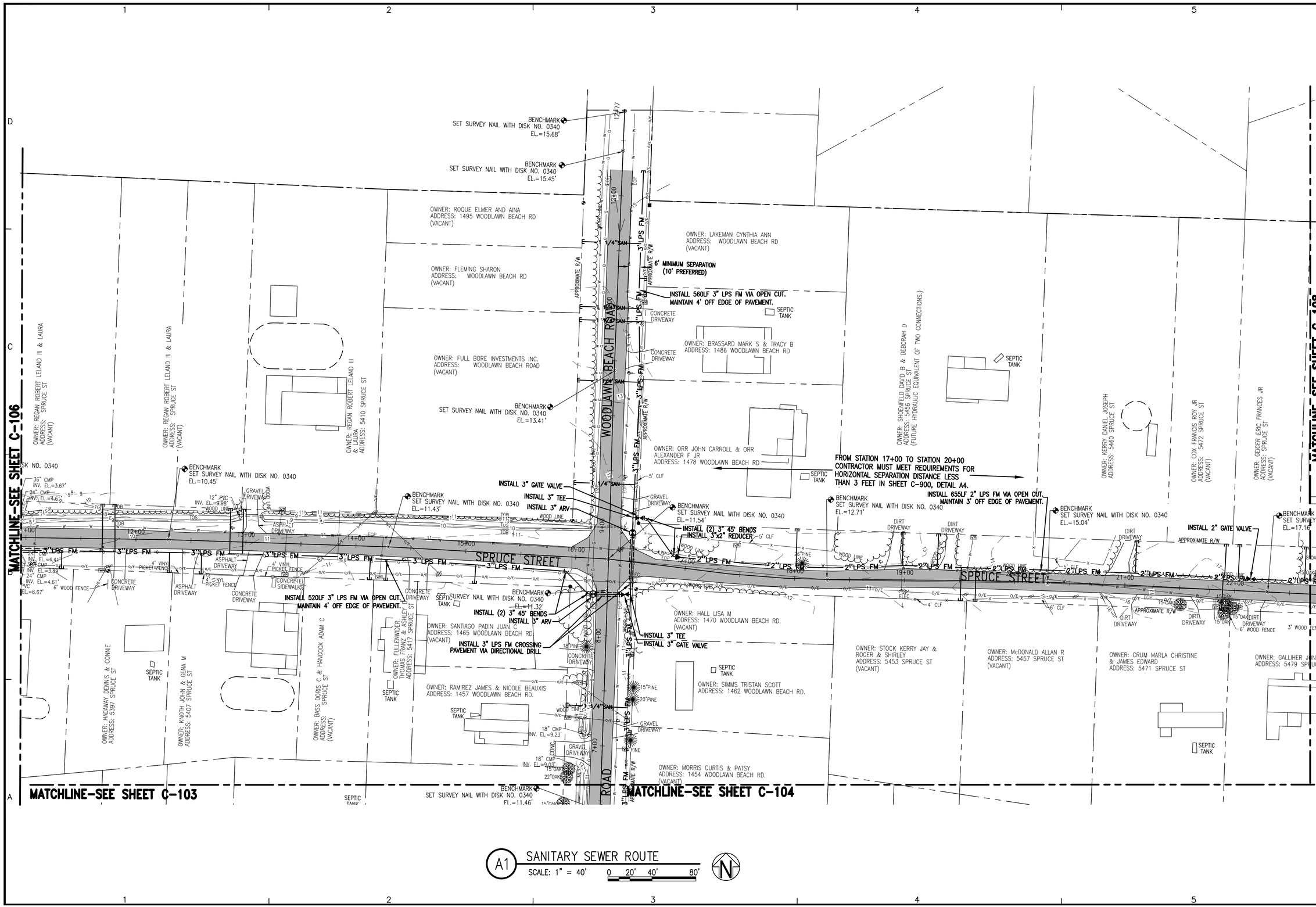


**BASKERVILLE-DONOVAN, INC.**
Innovative Infrastructure Solutions
449 W. MAIN ST., PENSACOLA, FL 32502 (850)438-9661
ENGINEERING BUSINESS: EB-0000340
Pensacola - Panama City Beach - Tallahassee - Mobile

*This drawing is the property of BASKERVILLE-DONOVAN, INC. and is not to be reproduced in whole or in part. It is not to be used on any other project and is to be returned upon request.*

JAMES E. ANDERSON, P.E.
FL Reg. Engineer #67494

**MATCHLINE-SEE SHEET C-108**

SSRUS SOUNDSIDE SEPTIC TANK ELIMINATION PROGRAM PHASE B
SANTA ROSA COUNTY, FLORIDA

| NO. | DATE | APPR. | REVISION/ACTION TAKEN |
|---|---|---|---|
| 1 | 02/22 | JEA | RELEASED FOR BID |

NOT RELEASED FOR CONSTRUCTION BY DATE

PROJECT NO: 20410.46
DESIGNED BY: KMS
DRAWN BY: THO
CHK'D BY: JEA
PROJ. MGR: RWD
DATE: FEBRUARY 2022

SANITARY SEWER ROUTE
SPRUCE STREET

C-107

K:\204 Gulf Breeze and SSRUS\20410.46 Soundside STEP\DWG\C-100.dwg, Mar 09, 2022 - 3:33:26PM, toverton

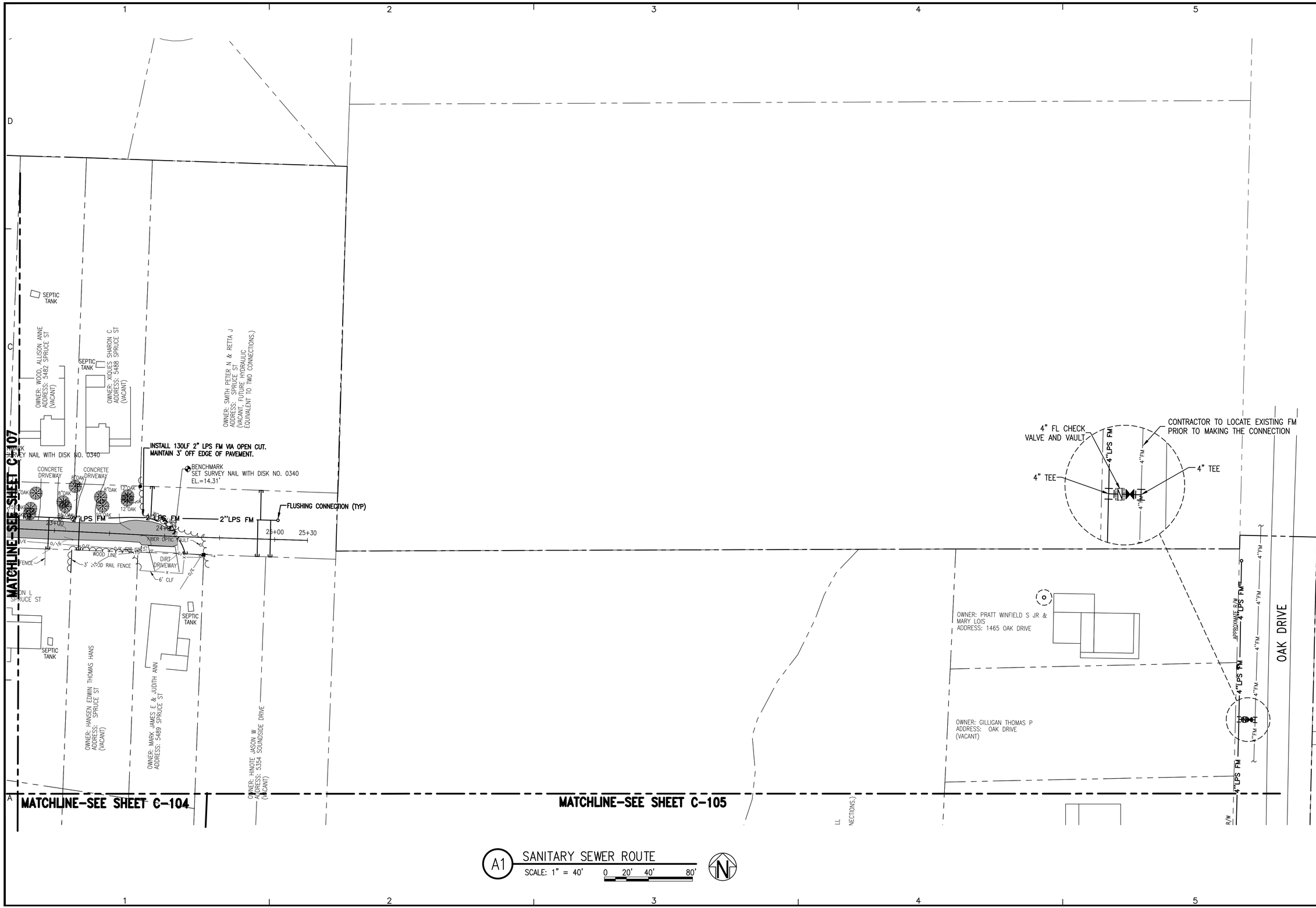


A1 SANITARY SEWER ROUTE
SCALE: 1" = 40'  0 20' 40' 80'

**BASKERVILLE-DONOVAN, INC.**
Innovative Infrastructure Solutions
449 W. MAIN ST., PENSACOLA, FL 32502 (850)438-9661
ENGINEERING BUSINESS: EB-0000340
Pensacola - Panama City Beach - Tallahassee - Mobile

This drawing is the property of BASKERVILLE-DONOVAN, INC. and is not to be reproduced in whole or in part. It is not to be used on any other project and is to be returned upon request.

JAMES E. ANDERSON, P.E.
FL Reg. Engineer #67494

SSRUS SOUNDSIDE SEPTIC TANK ELIMINATION PROGRAM PHASE B
SANTA ROSA COUNTY, FLORIDA

| NO. | DATE | APPR. | REVISION/ACTION TAKEN |
|---|---|---|---|
| 1 | 02/22 | JEA | RELEASED FOR BID |

PROJECT NO: 20410.46
DESIGNED BY: KMS
DRAWN BY: THO
CHK'D BY: JEA
PROJ. MGR: RWD
DATE: FEBRUARY 2022

NOT RELEASED FOR CONSTRUCTION BY DATE

SANITARY SEWER ROUTE
SPRUCE STREET

C-108

K:\204 Gulf Breeze and SSRUS\20410.46 Soundside STEP\DWG\C-100.dwg, Mar 09, 2022 - 2:16:25PM, toverton

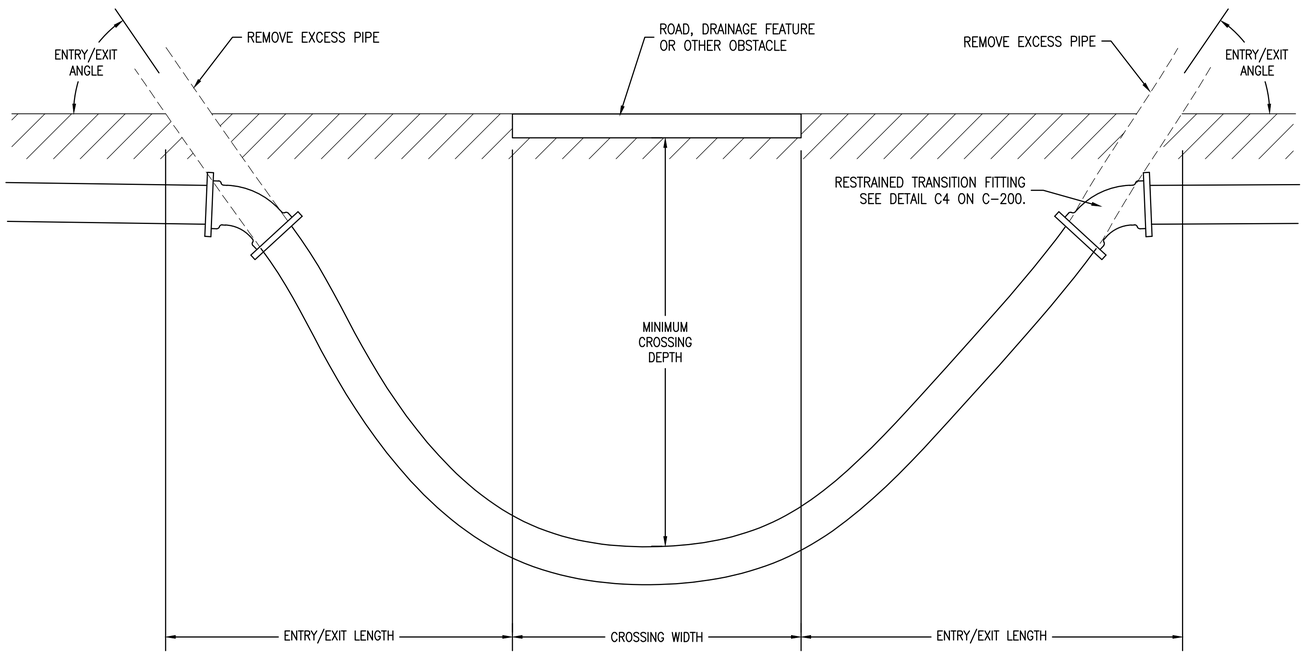


## C1 TYPICAL DIRECTIONAL DRILL STANDARD DETAIL

SCALE: N.T.S.

| SHEET # | ROAD NAME | APPROX. BEGIN STA | APPROX. END STA | PIPE DIA. (IN) | SERVICE | MATERIAL TYPE: | DESIGN ENTRY ANGLE° | ENTRY LENGTH (FT) | DESIGN EXIT ANGLE° | EXIT LENGTH (FT) | CROSSING WIDTH (FT) | TOTAL DRILL LENGTH (FT) | MIN. CROSSING DEPTH (FT) | COMMENTS/ ADDITIONAL CONFLICT INFO |
|---|---|---|---|---|---|---|---|---|---|---|---|---|---|---|
| C-101 | SOUNDSIDE DRIVE | 10+85 RT 15' | 12+10 RT 15' | 3 | FORCE MAIN | HDPE DR11 | 15 | 63 | 15 | 57 | 10 | 130 | 9 | CONTRACTOR TO LOCATE AND PROTECT UTILTIES CROSSING IN SOUNDSIDE DRIVE R/W |
| C-104 | SOUNDSIDE DRIVE AND WOODLAWN BEACH ROAD | 40+13 RT 38' | 40+13 LT 65' | 3 | FORCE MAIN | HDPE DR11 | 15 | 37 | 15 | 33 | 40 | 110 | 6 | CONTRACTOR TO LOCATE AND PROTECT UTILTIES CROSSING IN SOUNDSIDE DRIVE AND WOODLAWN BEACH ROAD R/W |
| C-106 | SPRUCE STREET | 10+40 RT 12' | 11+43 RT 12' | 3 | FORCE MAIN | HDPE DR11 | 15 | 43 | 15 | 47 | 10 | 100 | 8 | CONTRACTOR TO LOCATE AND PROTECT UTILTIES CROSSING IN SPRUCE STREET R/W |

NOTES:

1. LENGTHS GIVEN ARE HORIZINTAL DISTANCES AS MEASURED AT SURFACE
2. RESTRAINED TRANSITION FITTINGS SHALL BE UTILIZED FOR CONNECTION TO PIPING INSTALLED VIA OTHER METHODS
3. MINIMUM DEPTH SHALL BE CONFIRMED OR INCREASED BASED ON DRILLER'S SUBMITTED FRAC-OUT ANALYSIS AND PREVENTION PLAN
4. CONTRACTOR SHALL POSITIVELY LOCATE CONFLICTING UTILITIES AND OBSTACLES PRIOR TO BEGINNING DRILLING ACTIVITIES.
5. WHERE DIRECTIONAL DRILLS ARE INSTALLED WITHOUT AN UPSTREAM MECHANICAL ARV, CONTRACTOR TO UTILIZE MANUAL ARV FOR AIR PURGING DURING PIPE FILL.
6. ALL DIRECTIONAL DRILLS AT WATER CROSSINGS SHOULD HAVE UTILITY MARKER PLACED AT EITHER SIDE OF CROSSING.

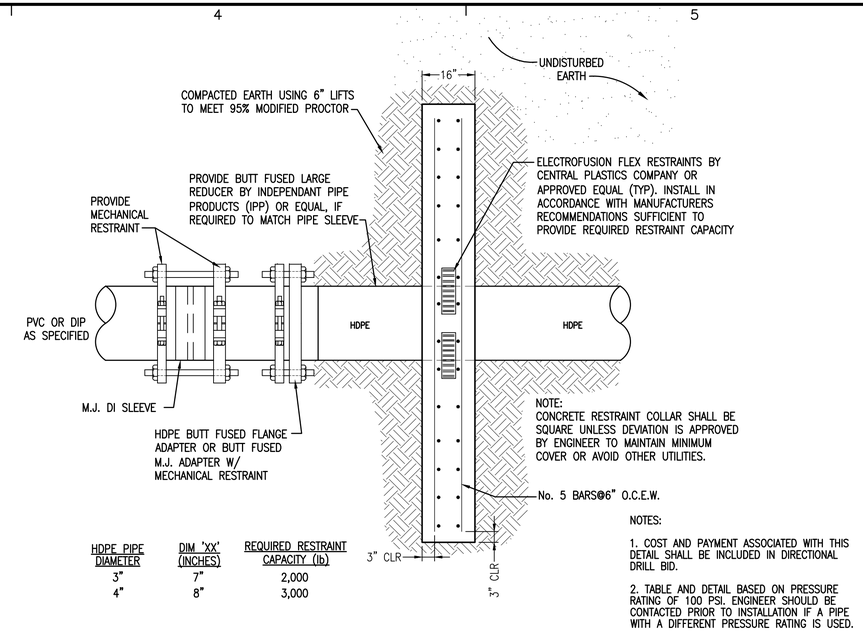


| HDPE PIPE DIAMETER | DIM 'XX' (INCHES) | REQUIRED RESTRAINT CAPACITY (lb) |
|---|---|---|
| 3" | 7" | 2,000 |
| 4" | 8" | 3,000 |

NOTES:

1. COST AND PAYMENT ASSOCIATED WITH THIS DETAIL SHALL BE INCLUDED IN DIRECTIONAL DRILL BID.
2. TABLE AND DETAIL BASED ON PRESSURE RATING OF 100 PSI. ENGINEER SHOULD BE CONTACTED PRIOR TO INSTALLATION IF A PIPE WITH A DIFFERENT PRESSURE RATING IS USED.

## C4 PVC TO HDPE TRANSITION CONNECTION DETAIL

NOT TO SCALE

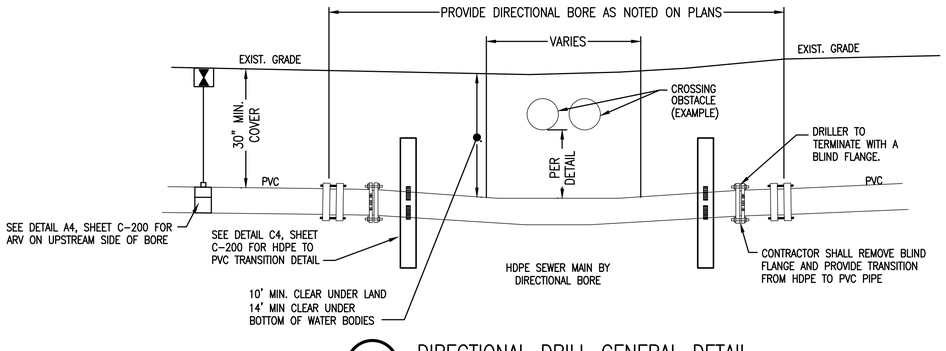


## A1 DIRECTIONAL DRILL GENERAL DETAIL

NOT TO SCALE

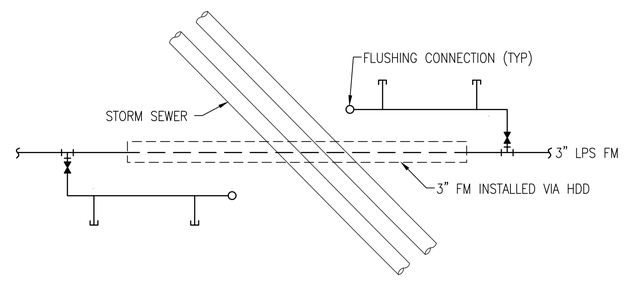


## A3 SERVICE CONNECTIONS IN HDD AREAS

NOT TO SCALE

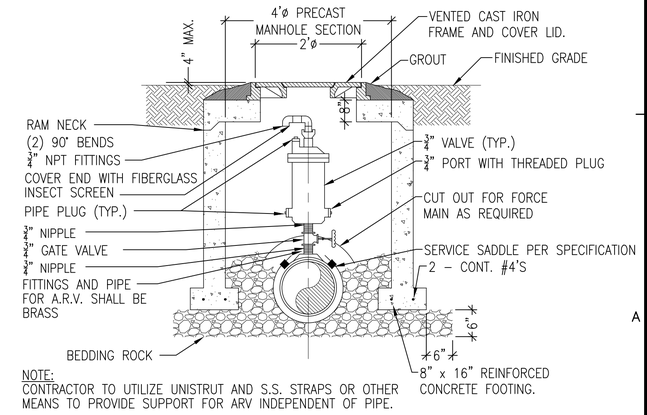


NOTE:
CONTRACTOR TO UTILIZE UNISTRUT AND S.S. STRAPS OR OTHER MEANS TO PROVIDE SUPPORT FOR ARV INDEPENDENT OF PIPE.

## A4 AIR/VACUUM RELEASE VALVE IN MANHOLE ON SHOULDER

NOT TO SCALE


BASKERVILLE-DONOVAN, INC.
Innovative Infrastructure Solutions
22219 PANAMA CITY BEACH PARKWAY, SUITE 200, PANAMA CITY BEACH, FL 32413 (850) 230-6150
ENGINEERING BUSINESS: EB-0000340
Pensacola - Panama City Beach - Tallahassee - Mobile



This drawing is the property of BASKERVILLE-DONOVAN, INC. and is not to be reproduced in whole or in part. It is not to be used on any other project and is to be returned upon request.


STATE OF FLORIDA PROFESSIONAL ENGINEER No 67494 JAMES ERIC ANDERSON
JAMES ERIC ANDERSON, P.E.
FL Reg. Engineer #67494

SSRUS SOUNDSIDE SEPTIC TANK ELIMINATION PROGRAM PHASE B
SANTA ROSA COUNTY, FLORIDA

| NO. | DATE | APPR. | REVISION/ACTION TAKEN |
|---|---|---|---|
| 1 | 02/22 | JEA | RELEASED FOR BID |

NOT RELEASED FOR CONSTRUCTION BY DATE

PROJECT NO: 20410.46
DESIGNED BY: JEA
DRAWN BY: THO
CHK'D BY: JEA
PROJ. MGR: RWD
DATE: FEBRUARY 2022

DIRECTIONAL DRILL DETAIL AND SCHEDULE

C-200

K:\204 Gulf Breeze and SSRUS\20410.46 Soundside STEP\DWG\C-200.dwg, Feb 02, 2022 - 11:43:25AM, toverton

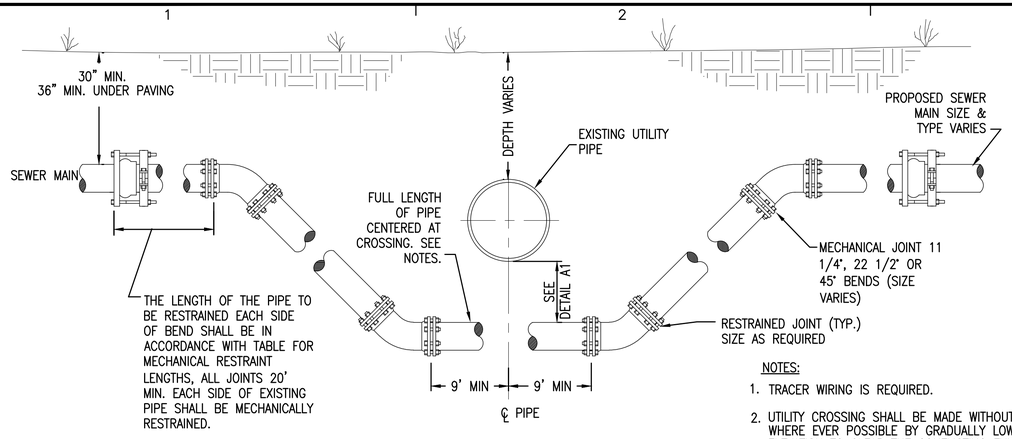


NOTES:

1. TRACER WIRING IS REQUIRED.
2. UTILITY CROSSING SHALL BE MADE WITHOUT USE OF ADDITIONAL FITTINGS WHERE EVER POSSIBLE BY GRADUALLY LOWERING THE CONSTRUCTED PIPE ELEVATION TO CLEAR THE CONFLICTING EXISTING UTILITY.
3. ALL COST OF UTILITY CROSSINGS SHALL BE INCIDENTAL TO THE PIPE UNIT PRICE AS CALLED FOR ON THE PLANS.
4. NO ADDITIONAL PAYMENT WILL BE MADE FOR USE OF D.I.P. UNLESS CALLED FOR ON THE PLANS.

## D1 ADJUSTMENT UNDER EXISTING UTILITIES

NOT TO SCALE

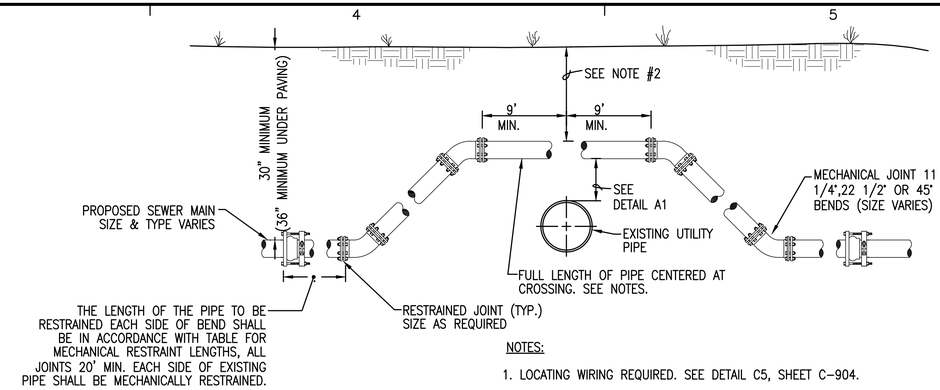


NOTES:

1. LOCATING WIRING REQUIRED. SEE DETAIL C5, SHEET C-904.
2. DEPTH OF BURY TO BE 36" MINIMUM IN PAVED AREAS MEASURED FROM FINISHED GRADE. DEPTH OF BURY TO BE 30" MINIMUM IN UNPAVED AREAS.

## D4 ADJUSTMENT OVER EXISTING UTILITIES

NOT TO SCALE

**LOCATION OF PUBLIC WATER SYSTEM MAINS IN ACCORDANCE WITH RULE 62-555.314, F.A.C.**

The following table summarizes the required separation distances from public water mains to other pipes as provided in Rule 62-62-555.314, F.A.C. Exceptions to these required distances are addressed on the second page.

**Separation Requirements for Public Water System Mains:**

| Other Pipe | Horizontal Separation (X) | Crossings Vertical Separation (Y) | Joint Spacing (Z) @ Crossings (Full Joint Centered) |
|---|---|---|---|
| | 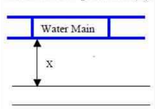  | 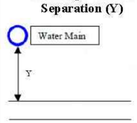  | 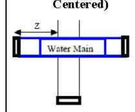  |
| • **Storm Sewers**<br>• **Stormwater Force Mains**<br>• **Reclaimed Water Pipelines regulated under Part III of Chapter 62-610, F.A.C.** | 3 ft. minimum | For water main installed above other pipe (preferred), 12 inches is the minimum except for storm sewer, then 6 inches is the minimum and 12 inches is preferred<br>12 inches minimum if water main is below other pipe | Alternate 3 ft. minimum |
| • **Vacuum Sanitary Sewer** | 10 ft. preferred<br>3 ft. minimum | For water main installed above other pipe, 12 inches preferred and 6 inches minimum<br>12 inches minimum if water main is below other pipe | Alternate 3 ft. minimum |
| • **Gravity or Pressure Sanitary Sewer**<br>• **Sanitary Sewer Force Main**<br>• **Reclaimed Water Pipelines not regulated under Part III of Chapter 62-610, F.A.C.** | 10 ft. preferred<br>6 ft. minimum<br>(note - 3 ft. minimum for gravity sanitary sewer where the bottom of the water main is laid at least 6 inches above the top of the gravity sanitary sewer) | For water main installed above other pipe (preferred), 12 inches is the minimum except for gravity sewer, then 6 inches is the minimum and 12 inches is preferred<br>12 inches minimum if water main is below other pipe | Alternate 6 ft. minimum |
| • **On-Site Sewage Treatment & Disposal System** | 10 ft. minimum | NA | NA |

Refer to the next page for exceptions to the minimum separation requirements provided above.

**Disclaimer – This document is provided for your convenience only. Please refer to Rule 62-555.314, F.A.C., for additional construction requirements.**

**EXCEPTIONS TO MINIMUM SEPARATION REQUIREMENTS**

Where it is not technically feasible or economically sensible to comply with the requirements of 62-555.314(1) or (2), F.A.C., **the Department shall allow exceptions to these requirements if suppliers of water or construction permit applicants provide technical or economic justification for each exception and provide alternative construction features that afford a similar level of reliability and public health protection.**

Acceptable alternative construction features include the following:

**LOCATION OF PUBLIC WATER SYSTEM MAINS IN ACCORDANCE WITH 62-555.314(5)(a), F.A.C.**

Figure 1. Horizontal separation distance X less than required but not less than 3 feet

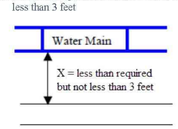


Figure 2. Joint spacing distance Z less than required

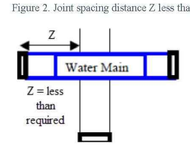


Where an underground water main is being laid **less than the required minimum horizontal distance** from another pipeline and where an underground water main is **crossing another pipeline and joints in the water main are being located less than the required minimum distance from joints in the other pipeline**:

1. Use of pressure-rated pipe conforming to the American Water Works Association standards incorporated into Rule 62-555.330, F.A.C., for the other pipeline if it is a gravity- or vacuum-type pipeline;
2. Use of welded, fused, or otherwise restrained joints for either the water main or the other pipeline; **or**
3. Use of watertight casing pipe or concrete encasement at least four inches thick for either the water main or the other pipeline.

**LOCATION OF PUBLIC WATER SYSTEM MAINS IN ACCORDANCE WITH 62-555.314(5)(b), F.A.C.**

Figure 3. Horizontal separation distance X less than 3 feet

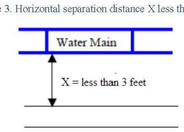


Figure 4. Crossing vertical separation distance Y less than required

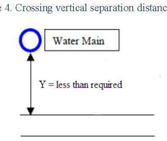


Where an underground water main is being laid **less than three feet horizontally** from another pipeline and where an underground water main is **crossing another pipeline and is being laid less than the required minimum vertical distance from the other pipeline**:

Use of pipe, or casing pipe, having high impact strength (i.e., having an impact strength at least equal to that of 0.25-inch-thick ductile iron pipe) or concrete encasement at least four inches thick for both the water main **and** for the other pipeline if it is new and is conveying wastewater or reclaimed water.

**Disclaimer – This document is provided for your convenience only. Please refer to Rule 62-555.314, F.A.C., for additional construction requirements.**

## A1 PIPE SEPARATION REQUIREMENTS

SCALE: NO SCALE


BASKERVILLE-DONOVAN, INC.
Innovative Infrastructure Solutions
449 W. MAIN ST., PENSACOLA, FL 32502 (850)438-9661
ENGINEERING BUSINESS: EB-0000340
Pensacola - Panama City Beach - Tallahassee - Mobile



This drawing is the property of BASKERVILLE-DONOVAN, INC. and is not to be reproduced in whole or in part. It is not to be used on any other project and is to be returned upon request.



JAMES E. ANDERSON, P.E.
FL Reg. Engineer #67494


SSRUS SOUNDSIDE SEPTIC TANK ELIMINATION PROGRAM PHASE B
SANTA ROSA COUNTY, FLORIDA

| NO. | DATE | APPR. | REVISION/ACTION TAKEN |
|---|---|---|---|
| 1 | 02/22 | JEA | RELEASED FOR BID |

NOT RELEASED FOR CONSTRUCTION BY DATE

PROJECT NO: 20410.46
DESIGNED BY: KG
DRAWN BY: THO
CHK'D BY: JEA
PROJ. MGR: RWD
DATE: FEBRUARY 2022

STANDARD DETAILS

C-900


K:\204 Gulf Breeze and SSRUS\20410.46 Soundside STEP\DWG\C-900.dwg, Mar 09, 2022 - 2:37:56PM, toverton

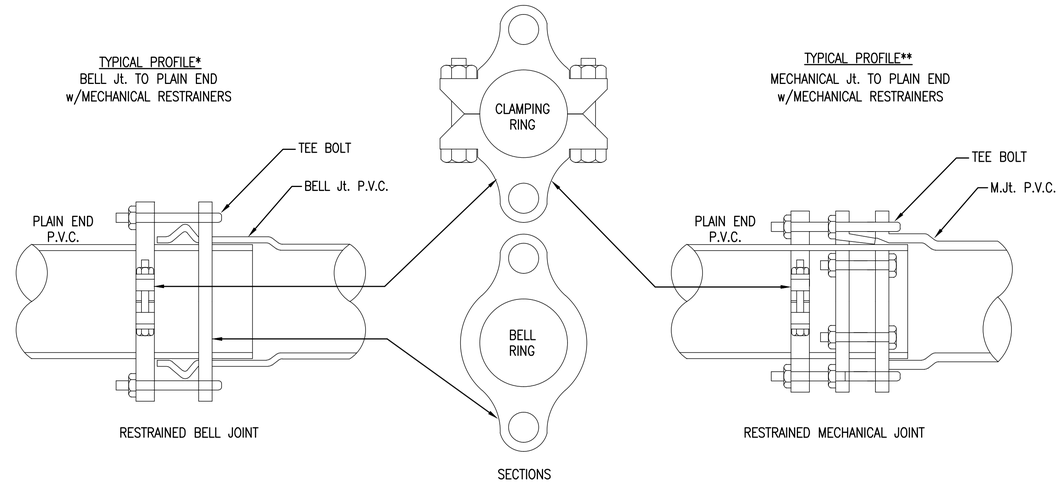


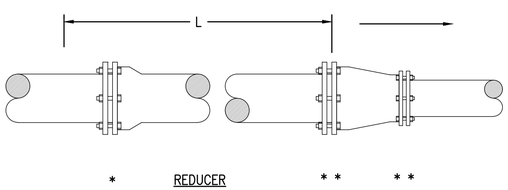


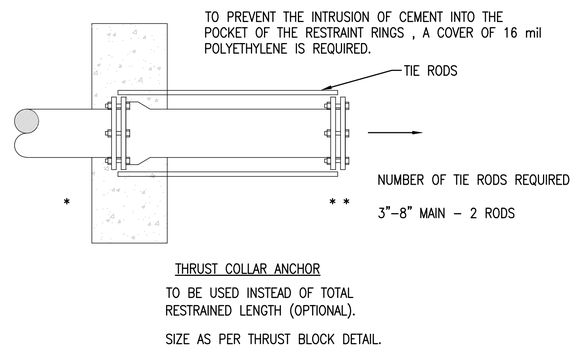


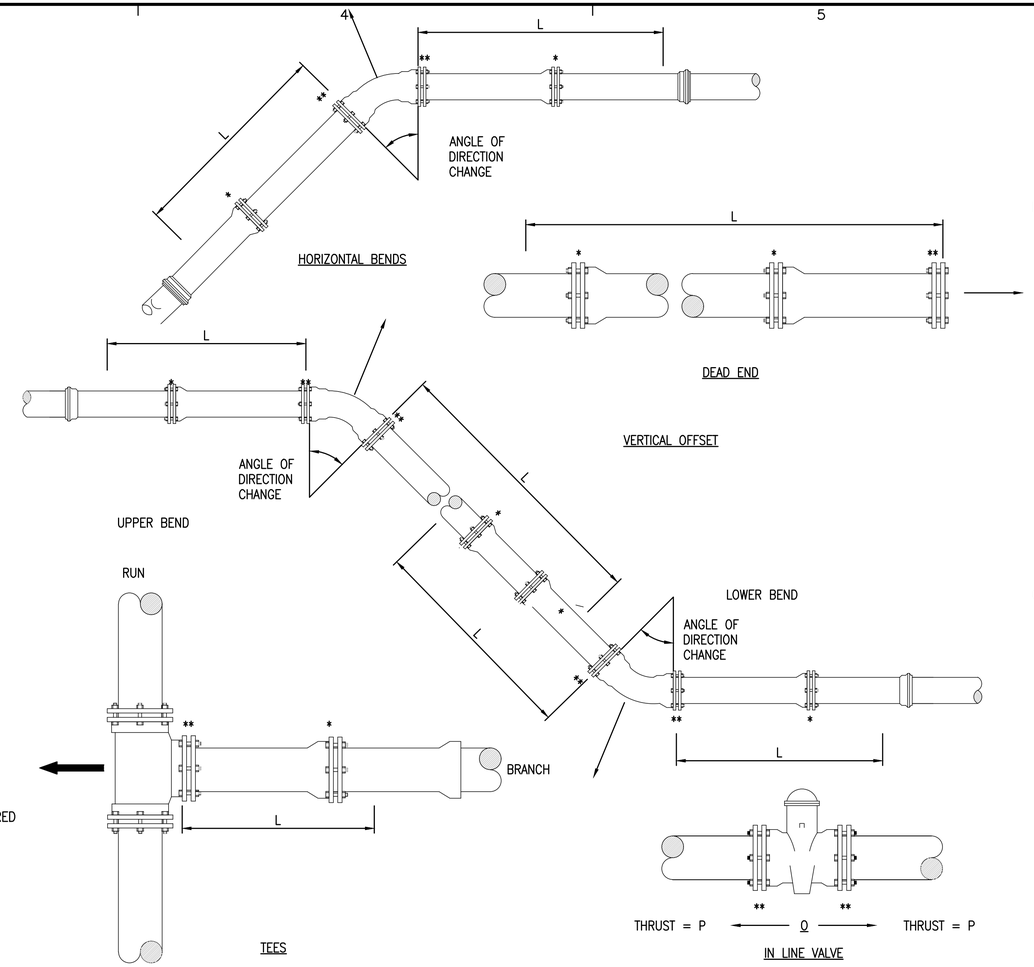


## B4 MECHANICAL RESTRAINT JOINT DETAILS

NOT TO SCALE

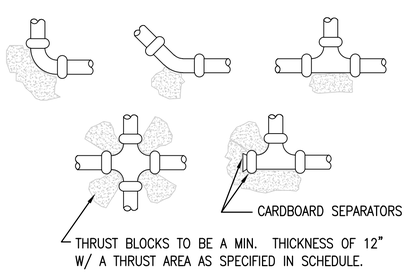


| PIPE DIA. | CAP OR TEE | 90° BEND | 45° BEND | 22.5° BEND |
|---|---|---|---|---|
| 2" | 1.0 | 1.0 | 1.0 | 1.0 |
| 3" | 1.1 | 1.5 | 1.0 | 1.0 |
| 4" | 1.9 | 2.7 | 1.4 | 1.0 |

AREAS LISTED IN SQUARE FEET

TYPE OF SOIL: SANDY SILT
BEARING CAPACITY: 1,500 PSF
PIPE PRESSURE: 150 PSI
FACTOR OF SAFETY: 1.5

## A1 THRUST BLOCK SUPPORT DETAIL

NOT TO SCALE

L=MINIMUM LENGTH TO BE RESTRAINED ON EACH SIDE OF FITTING (FEET)

| NOMINAL PIPE SIZE (INCHES) | 11 1/4° HORIZONTAL ELBOW | 22 1/2° HORIZONTAL ELBOW | 45° HORIZONTAL ELBOW | 90° HORIZONTAL ELBOW | HORIZONTAL TEES | HORIZONTAL PLUGS & VALVES (SEE NOTE 3) | 45° VERTICAL OFFSET UPPER LENGTH | 45° VERTICAL OFFSET LOWER LENGTH | 22 1/2° VERT. OFFSET UPPER LENGTH | 22 1/2° VERT. OFFSET LOWER LENGTH | REDUCER TO 1 SIZE SMALLER LENGTH ON LARGER SIZE SIDE |
|---|---|---|---|---|---|---|---|---|---|---|---|
| ≤ 4 | 2 | 4 | 7 | 18 | 20 – RUN 1 – BRANCH | 39 | 16 / 3 | 8 / 1 | 13 | | |

NOTES

1. TABLE ASSUMPTIONS: PVC PIPE, SAFETY FACTOR = 1.5, TEST PRESSURE = 150PSI SOIL = GM OR SM, 3 FT. BURY DEPTH TO TOP OF PIPE, TRENCH TYPE 3, BRANCH ON TEE IS EQUAL SIZE OR SMALLER THAN RUN OF TEE SIZE AND 20 FEET OF PIPE IS INSTALLED PAST THE TEE ON THE RUN SIDE (SMALLER BRANCH SIZES MUST BE CALCULATED BY THE ENGINEER). VERTICAL OFFSETS ARE 3 FEET DEEP ON TOP AND 8 FEET DEEP ON BOTTOM. REDUCERS ARE CALCULATED FOR ONE SIZE REDUCTION. OTHER CONDITIONS WILL REQUIRE ADDITIONAL CALCULATIONS.

2. ALL FITTINGS MUST BE RESTRAINED. ONE OF THE FOLLOWING METHODS MAY BE USED:
A. MECHANICAL RESTRAINTS AT FITTING AND AT ADJACENT JOINTS TO A LENGTH AS SPECIFIED IN CHART.
B. TIE RODS AT FITTING AND THROUGH JOINTS TO A LENGTH AS SPECIFIED IN CHART.

## A4 MECHANICAL RESTRAINT LENGTH TABLE – PVC

NOT TO SCALE

BASKERVILLE-DONOVAN, INC.
Innovative Infrastructure Solutions
449 W. MAIN ST., PENSACOLA, FL 32502 (850)438-9661
ENGINEERING BUSINESS: EB-0000340
Pensacola - Panama City Beach - Tallahassee - Mobile

This drawing is the property of BASKERVILLE–DONOVAN, INC. and is not to be reproduced in whole or in part. It is not to be used on any other project and is to be returned upon request.

JAMES E. ANDERSON, P.E.
FL. REG. ENGINEER #67494

SSRUS SOUNDSIDE SEPTIC TANK ELIMINATION PROGRAM PHASE B
SANTA ROSA COUNTY, FLORIDA

| NO. | DATE | APPR. | REVISION/ACTION TAKEN |
|---|---|---|---|
| 1 | 02/22 | JEA | RELEASED FOR BID |

NOT RELEASED FOR CONSTRUCTION BY DATE

PROJECT NO: 20410.46
DESIGNED BY: KG
DRAWN BY: THO
CHK'D BY: JEA
PROJ. MGR: RMD
DATE: FEBRUARY 2022

GENERAL DETAILS

C–901

K:\204 Gulf Breeze and SSRUS\20410.46 Soundside STEP\DWG\C-901.dwg, Feb 02, 2022 – 11:45:51AM, toverton

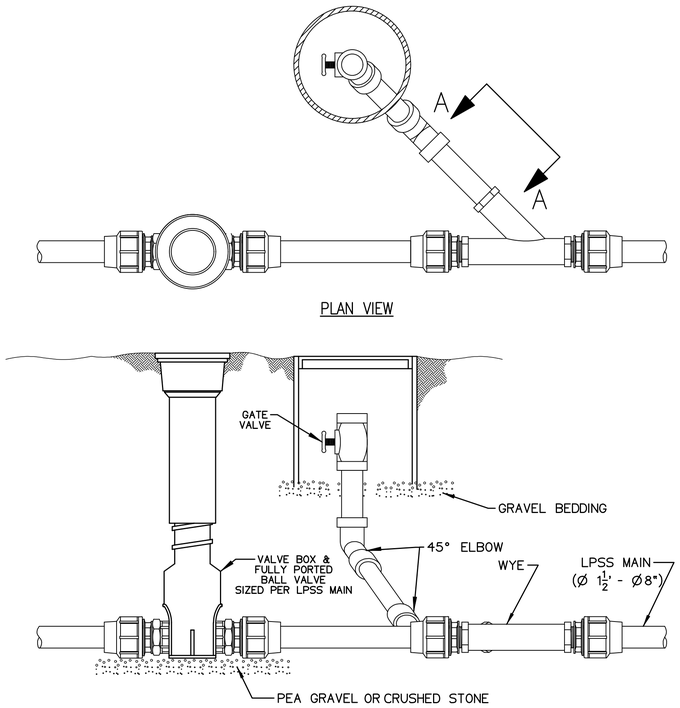


C1 TYPICAL FLUSHING CONNECTION ON LPSS MAIN

NOT TO SCALE

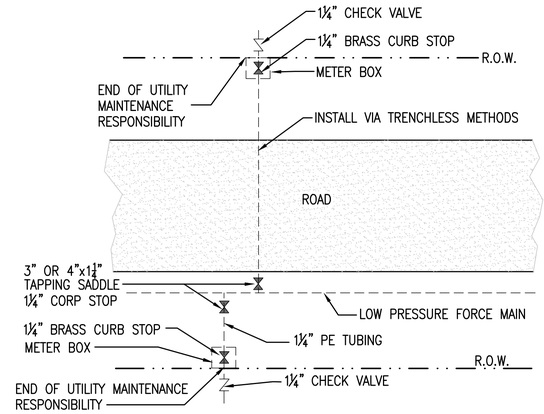


D3 TYPICAL LONG & SHORT SERVICE

NOT TO SCALE

NOTE:

SEE DETAIL A2 AND A4 BELOW FOR PROFILE VIEW OF LONG AND SHORT SERVICE CONNECTION.

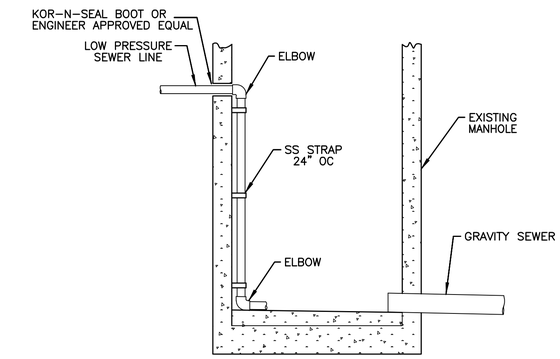


D5 TYPICAL DROP CONNECTION LPSS IN EXISTING MANHOLE

NOT TO SCALE

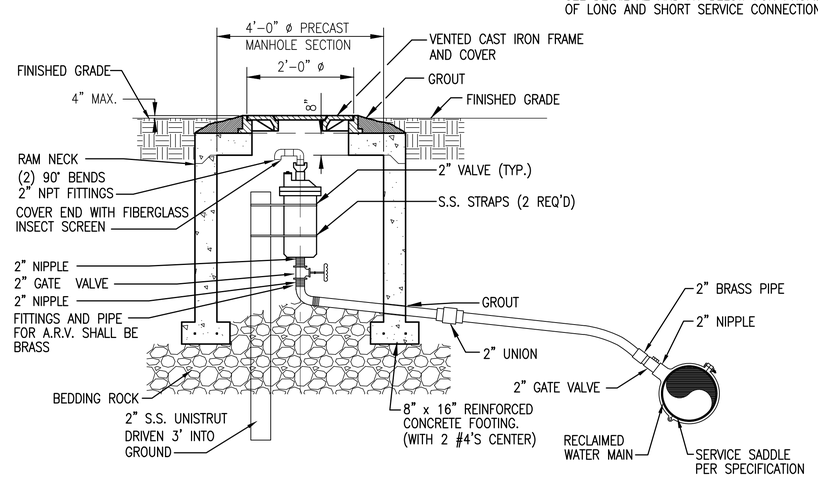


B3 OFFSET AIR/VACUUM RELEASE VALVE IN MANHOLE ON SHOULDER

NOT TO SCALE

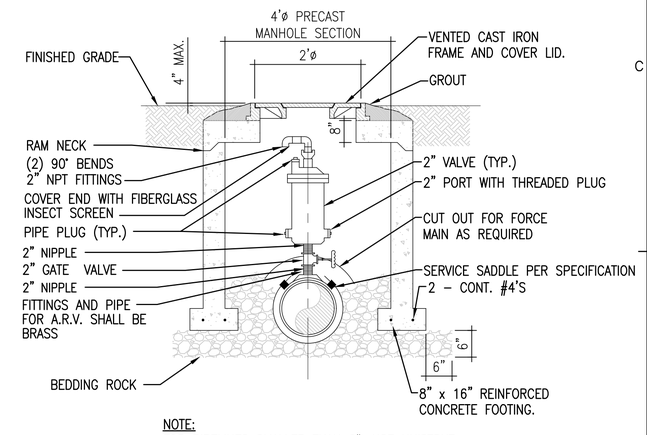


NOTE:

FOR PIPELINES SMALLER THAN 6", USE UNISTRUT DRIVEN 3' INTO GROUND FOR SUPPORT.

B5 AIR/VACUUM RELEASE VALVE IN MANHOLE ON SHOULDER

NOT TO SCALE

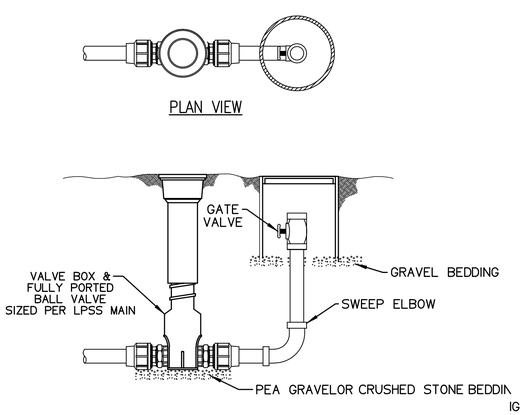


A1 TYPICAL TERMINAL FLUSHING CONNECTION

NOT TO SCALE

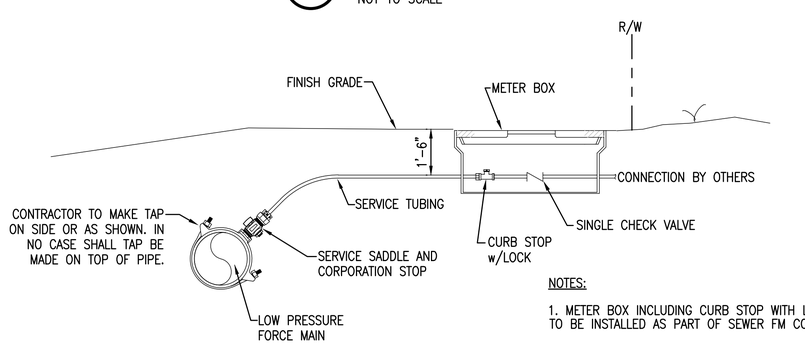


NOTES:

1. METER BOX INCLUDING CURB STOP WITH LOCK TO BE INSTALLED AS PART OF SEWER FM CONTRACT.

A2 TYPICAL SERVICE CONNECTION - SHORT

NOT TO SCALE

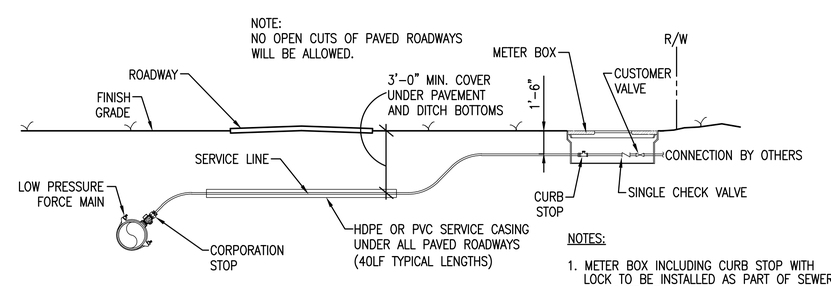


NOTES:

1. METER BOX INCLUDING CURB STOP WITH LOCK TO BE INSTALLED AS PART OF SEWER FM CONTRACT.

A4 TYPICAL SERVICE CONNECTION - LONG

NOT TO SCALE


BASKERVILLE-DONOVAN, INC.
Innovative Infrastructure Solutions
449 W. MAIN ST., PENSACOLA, FL 32502 (850)438-9661
ENGINEERING BUSINESS: EB-0000340
Pensacola - Panama City Beach - Tallahassee - Mobile



This drawing is the property of BASKERVILLE-DONOVAN, INC. and is not to be reproduced in whole or in part. It is not to be used on any other project and is to be returned upon request.


JAMES E. ANDERSON, P.E.
FL. REG. ENGINEER #67494

SSRUS SOUNDSIDE SEPTIC TANK ELIMINATION PROGRAM PHASE B

SANTA ROSA COUNTY, FLORIDA

| NO. | DATE | APPR. | REVISION/ACTION TAKEN |
|---|---|---|---|
| 1 | 02/22 | JEA | RELEASED FOR BID |

NOT RELEASED FOR CONSTRUCTION BY DATE

PROJECT NO: 20410.46
DESIGNED BY: KG
DRAWN BY: THO
CHK'D BY: JEA
PROJ. MGR: RWD
DATE: FEBRUARY 2022

GENERAL DETAILS

C-902

K:\204 Gulf Breeze and SSRUS\20410.46 Soundside STEP\DWG\C-902.dwg, Mar 09, 2022 - 2:29:42PM, toverton

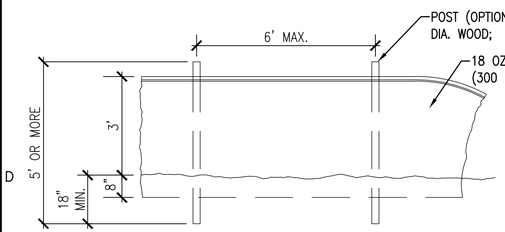


## D1 STAKED TURBIDITY BARRIER

NOT TO SCALE

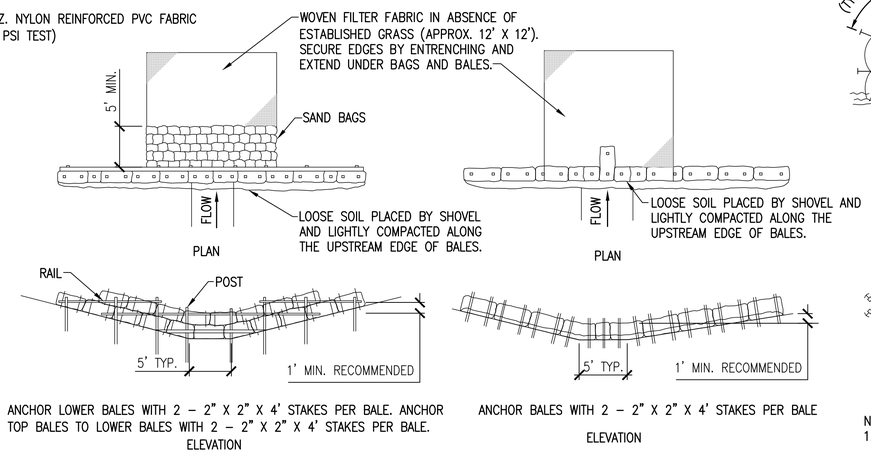


ANCHOR LOWER BALES WITH 2 – 2" X 2" X 4' STAKES PER BALE. ANCHOR TOP BALES TO LOWER BALES WITH 2 – 2" X 2" X 4' STAKES PER BALE.

ELEVATION

ANCHOR BALES WITH 2 – 2" X 2" X 4' STAKES PER BALE

ELEVATION

APPLICATION AND SPACING: THE USE OF TYPES I & II BALE BARRIERS SHOULD BE LIMITED TO THE CONDITIONS OUTLINED IN DETAIL *

TYPE II

TYPE I

## C2 HAY BALE BARRIER FOR UNPAVED DITCHES

NOT TO SCALE

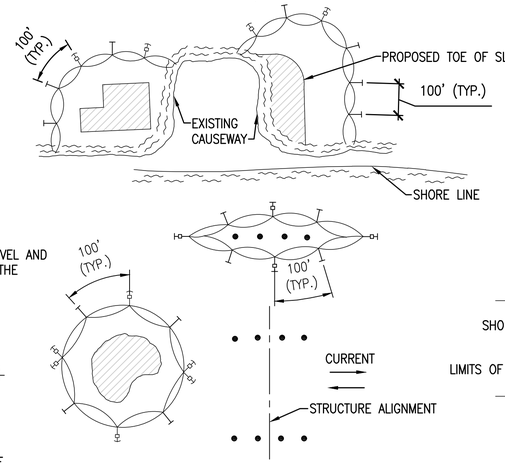


NOTES:

1. TURBIDITY BARRIERS ARE TO BE USED IN ALL PERMANENT BODIES OF WATER REGARDLESS OF WATER DEPTH.
2. NUMBER AND SPACING OF ANCHORS DEPENDENT ON CURRENT VELOCITIES.
3. DEPLOYMENT OF BARRIER AROUND PILE LOCATIONS MAY VARY TO ACCOMMODATE CONSTRUCTION OPERATIONS.
4. NAVIGATION MAY REQUIRE SEGMENTING BARRIER DURING CONSTRUCTION OPERATIONS.

LEGEND

- PILE LOCATIONS
- DREDGE OR FILL AREA
- MOORING BUOY W/ANCHOR
- ANCHOR
- BARRIER MOVEMENT DUE TO CURRENT ACTION

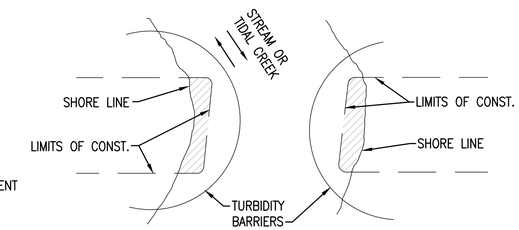


NOTE:
TURBIDITY BARRIERS FOR FLOWING STREAMS AND TIDAL CREEKS MAY BE EITHER FLOATING, OR STAKED TYPES OR ANY COMBINATIONS OF TYPES THAT WILL SUIT SITE CONDITIONS AND MEET EROSION CONTROL AND WATER QUALITY REQUIREMENTS. THE BARRIER TYPE(S) WILL BE AT THE CONTRACTORS OPTION UNLESS OTHERWISE SPECIFIED IN THE PLANS, AND/OR STAKED TURBIDITY BARRIER. POSTS IN STAKED TURBIDITY BARRIERS TO BE INSTALLED IN VERTICAL POSITION UNLESS OTHERWISE DIRECTED BY THE ENGINEER.

## C4 TURBIDITY BARRIER APPLICATIONS

NOT TO SCALE

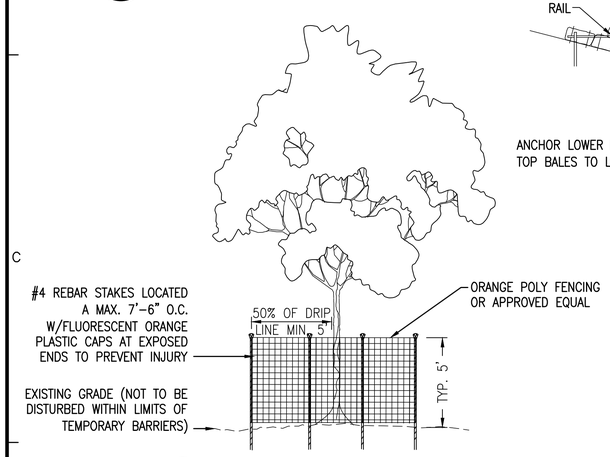


## C1 TREE PROTECTION DETAIL

NOT TO SCALE

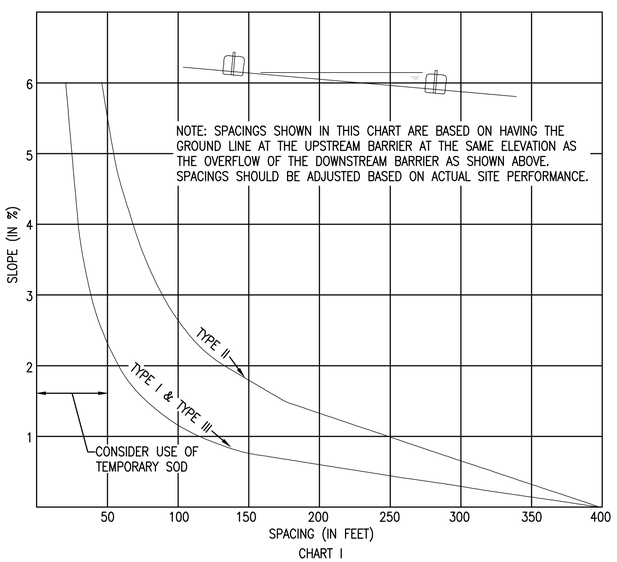


CHART I

RECOMMENDED SPACING FOR BALED HAY BARRIERS AND TYPE III SILT FENCE

## A1 EROSION CONTROL BARRIER AND FENCE SPACING GUIDE

NOT TO SCALE

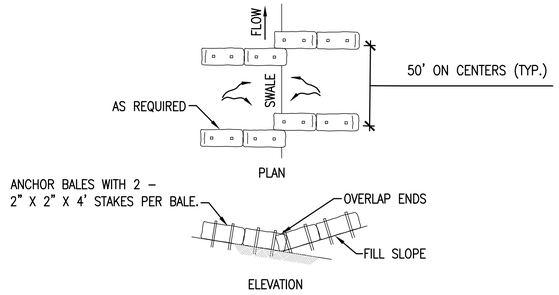


TO BE USED AT SELECTED SITES WHERE THE NATURAL GROUND SLOPES TOWARD THE TOE OF SLOPE

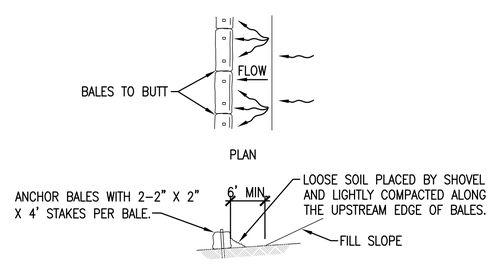


TO BE USED AT SELECTED SITES WHERE THE NATURAL GROUND SLOPES TOWARD THE TOE OF SLOPE

## A2 HAY BALE BARRIERS FOR FILL SLOPES

NOT TO SCALE

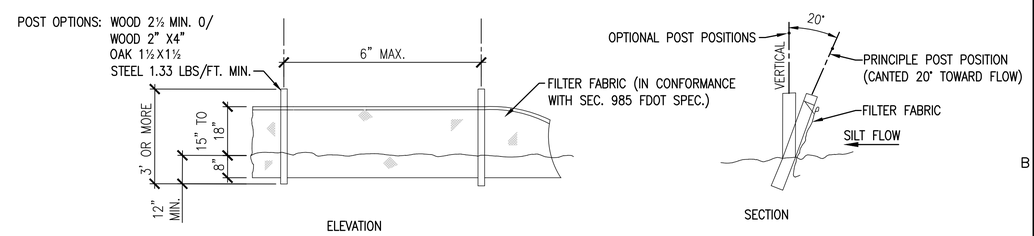


NOTE: SILT FENCE TO BE PAID FOR UNDER THE CONTRACT UNIT PRICE FOR STAKED SILT FENCE (LF).

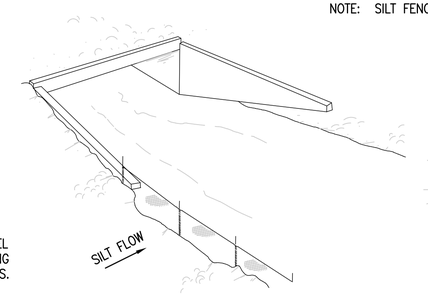


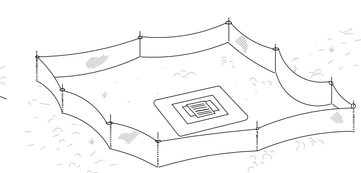

SILT FENCE PROTECTION AROUND DITCH BOTTOM INLETS.

NOTE: SPACING FOR TYPE III FENCE TO BE IN ACCORDANCE WITH CHART I, SHEET 1 OF 3 AND DITCH INSTALLATIONS AT DRAINAGE STRUCTURES SHEET 2 OF 3.

DO NOT DEPLOY IN A MANNER THAT SILT FENCES WILL ACT AS A DAM ACROSS PERMANENT FLOWING WATERCOURSES. SILT FENCES ARE TO BE USED AT UPLAND LOCATIONS AND TURBIDITY BARRIERS USED AT PERMANENT BODIES OF WATER.

## A4 TYPE III SILT FENCE APPLICATIONS

NOT TO SCALE


BASKERVILLE-DONOVAN, INC.
Innovative Infrastructure Solutions
449 W. MAIN ST., PENSACOLA, FL 32502 (850)438-9661
ENGINEERING BUSINESS: EB-0000340
Pensacola - Panama City Beach - Tallahassee - Mobile



This drawing is the property of BASKERVILLE-DONOVAN, INC. and is not to be reproduced in whole or in part. It is not to be used on any other project and is to be returned upon request.


JAMES E. ANDERSON, P.E.
FL. REG. ENGINEER #67494

SSRUS SOUNDSIDE SEPTIC TANK ELIMINATION PROGRAM PHASE B

SANTA ROSA COUNTY, FLORIDA

| NO. | DATE | APPR. | REVISION/ACTION TAKEN |
|---|---|---|---|
| 1 | 02/22 | JEA | RELEASED FOR BID |

NOT RELEASED FOR CONSTRUCTION BY DATE

PROJECT NO: 20410.46
DESIGNED BY: KG
DRAWN BY: THO
CHK'D BY: JEA
PROJ. MGR: RWD
DATE: FEBRUARY 2022

STANDARD DETAILS

C-903


K:\204 Gulf Breeze and SSRUS\20410.46 Soundside STEP\DWG\C-903.dwg, Feb 02, 2022 – 10:24:12AM, toverton

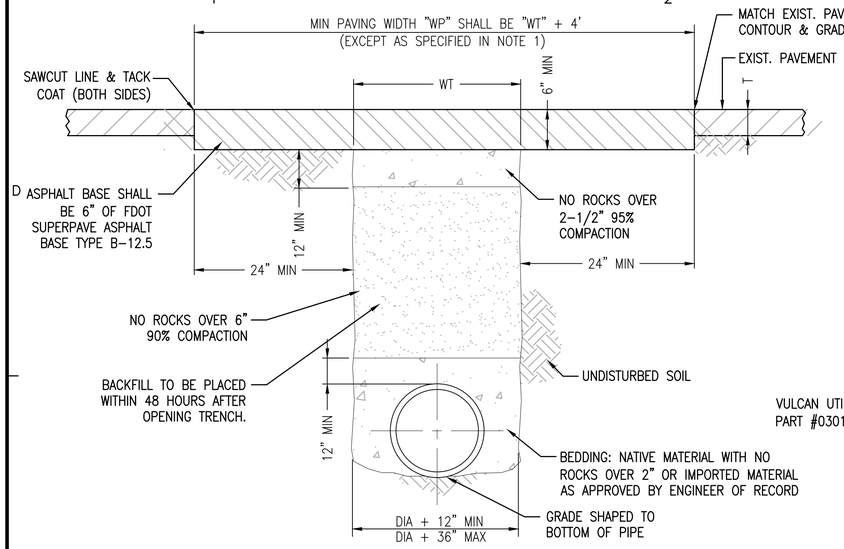


NOTES:

1. MIN 10' WIDE A.C. PAVEMENT/OVERLAY LAID WITH PAVING MACHINE SHALL BE REQUIRED FOR ALL TRENCH PATCHES IN EXCESS OF 300 L.F.
2. SPREADER BOXES MAY BE EMPLOYED FOR TRENCH PAVING JOBS LESS THAN 300 L.F.
3. UNLESS OTHERWISE INSTRUCTED BY THE ENGINEER OF RECORD, TRENCH SHALL BE STRAIGHT GRADE ACROSS WIDTH OF TRENCH AND SHOULD NOT BE CROWNED AT CENTER.
4. CONTRACTOR SHALL GIVE 24 HOUR NOTICE FOR INSPECTION PRIOR TO COMMENCEMENT OF ANY WORK.
5. ALL BACKFILLED TRENCHES SHALL BE PAVED WITH TEMPORARY A.C. PAVEMENT AS DIRECTED IN THE FIELD BY THE ENGINEER OF RECORD UNTIL PERMANENT PAVEMENT IS CONSTRUCTED.
6. DETAIL IS APPLICABLE TO BACKFILL AND STREET SURFACE REPLACEMENT FOR THE INSTALLATION OF UNDERGROUND FACILITIES AND ANY OTHER EXCAVATION IN CONJUNCTION WITH THE REPLACEMENT OR CONSTRUCTION OF SAID FACILITIES.
7. AFTER STREET PATCHING HAS BEEN COMPLETED, THE ENTIRE ROAD WILL BE BROOMED, TACK COATED, COVERED WITH PETROMAT A597, TACK COATED AGAIN AND THEN THE ENTIRE ROAD OVERLAID. ALTERNATE CONSTRUCTION SEQUENCES RECOMMENDED BY MANUFACTURER MAY BE SUBMITTED TO ENGINEER FOR APPROVAL.

## C1 PAVEMENT REPAIR DETAIL

SCALE: NO SCALE

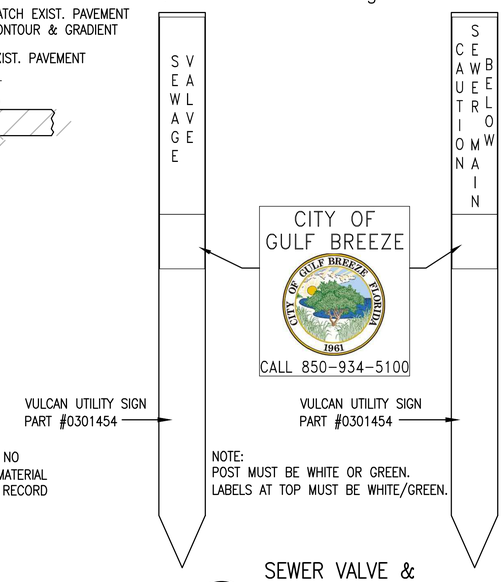


NOTE:
POST MUST BE WHITE OR GREEN.
LABELS AT TOP MUST BE WHITE/GREEN.

## C3 SEWER VALVE & PIPELINE MARKER

NOT TO SCALE

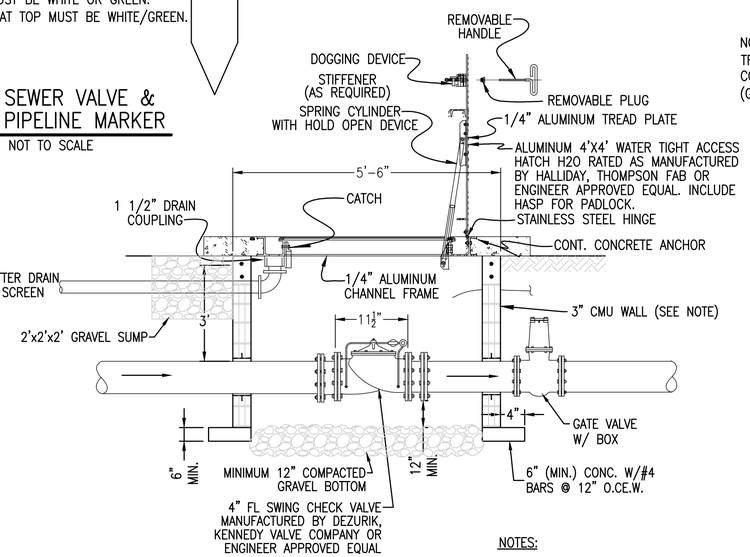


## B3 VALVE PIT PROFILE

NOT TO SCALE

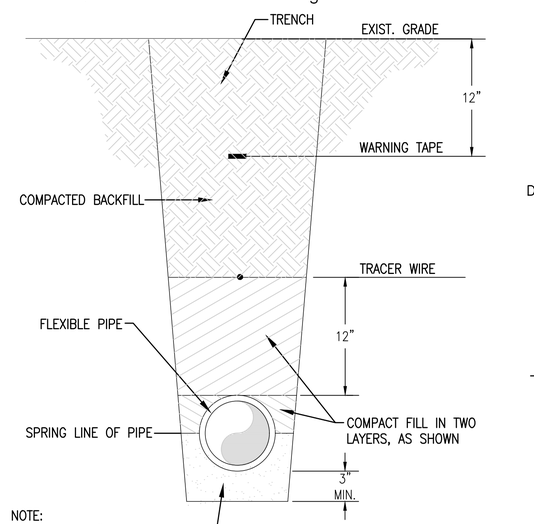


NOTE:
TRACER WIRE #10 AWG THHN, COLOR MATCHED TO PIPE (GREEN FOR WASTEWATER)

## C5 TYPICAL PIPE BEDDING

NOT TO SCALE

NOTES:

1. VALVE COVER SHALL BE MARKED "SEWER" AS APPLICABLE.
2. VALVE BOX TOP SHALL BE FLUSH WITH FINISHED GRADE OR 1/2" ABOVE NATURAL GROUND LEVEL.
3. EARTH UNDER FLANGE OF VALVE BOX & COLLAR TO BE FIRM AND WELL TAMPED TO ENSURE AGAINST VALVE BOX SETTLING.

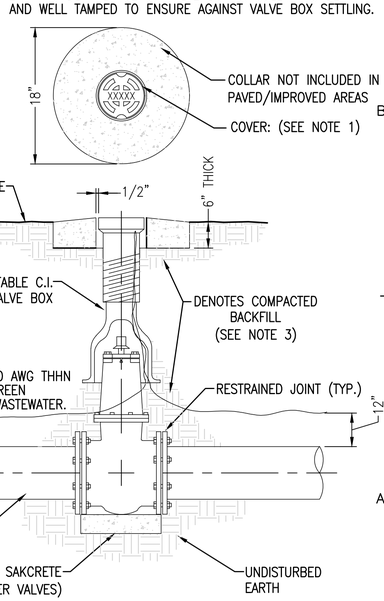


## A5 TYPICAL VALVE & BOX INSTALLATION

NOT TO SCALE

NOTES:

1. VAULT SHALL BE CAST IN PLACE OR PRECAST REINFORCED CONCRETE.
2. HATCH SHALL INCLUDE GUTTER THAT DRAINS TO GRAVEL BED.
3. VAULT SHALL INCLUDE RECESSED LIFT HOOKS (GALVANIZED) FOR FUTURE REMOVAL.

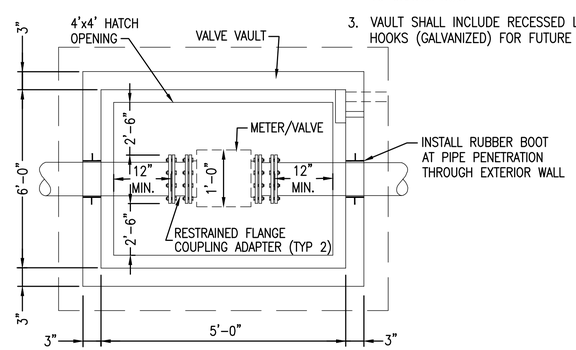


## A3 VALVE PIT PLAN

NOT TO SCALE

NOTES:

1. CONCRETE SHALL HAVE A COMPRESSIVE STRENGTH OF 3,000 P.S.I. AT 28 DAYS.
2. REPLACE CONCRETE TO NEAREST EXISTING JOINT EACH DIRECTION OR TO RIGHT OF WAY LINE
3. NEW CONCRETE SURFACE SHALL MATCH EXISTING SURFACE (LINE, GRADE & FINISH)

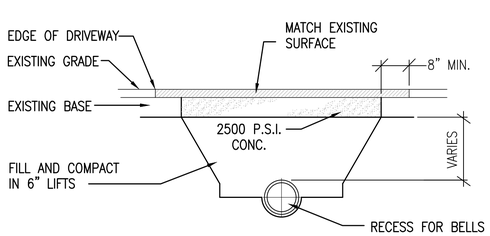


## A1 DRIVEWAY PATCH DETAIL

NOT TO SCALE

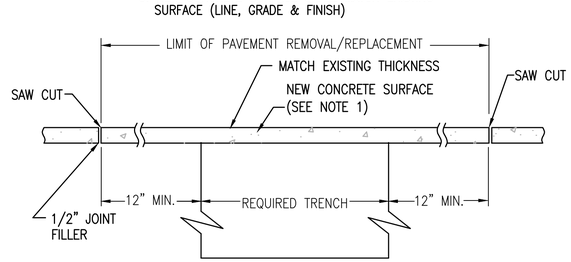


## A2 CONCRETE REPLACEMENT DETAIL

SCALE: NO SCALE


BASKERVILLE-DONOVAN, INC.
Innovative Infrastructure Solutions
449 W. MAIN ST., PENSACOLA, FL 32502 (850)438-9661
ENGINEERING BUSINESS: EB-0000340
Pensacola - Panama City Beach - Tallahassee - Mobile



This drawing is the property of BASKERVILLE-DONOVAN, INC. and is not to be reproduced in whole or in part. It is not to be used on any other project and is to be returned upon request.


JAMES E. ANDERSON, P.E.
FL. REG. ENGINEER #67494

SSRUS SOUNDSIDE SEPTIC TANK ELIMINATION PROGRAM PHASE B
SANTA ROSA COUNTY, FLORIDA

| NO. | DATE | APPR. | REVISION/ACTION TAKEN |
|---|---|---|---|
| 1 | 02/22 | JEA | RELEASED FOR BID |

NOT RELEASED FOR CONSTRUCTION BY DATE

PROJECT NO: 20410.46
DESIGNED BY: KG
DRAWN BY: THO
CHK'D BY: JEA
PROJ. MGR: RWD
DATE: FEBRUARY 2022

STANDARD DETAILS

C-904

K:\204 Gulf Breeze and SSRUS\20410.46 Soundside STEP\DWG\C-904.dwg, Feb 14, 2022 - 4:41:00PM, toverton

## CONDITIONS

WHERE ANY VEHICLE, EQUIPMENT, WORKERS OR THEIR ACTIVITIES ARE BEHIND AN EXISTING BARRIER, MORE THAN 2' BEHIND THE CURB, OR 15' OR MORE FROM EDGE OF TRAVEL WAY.

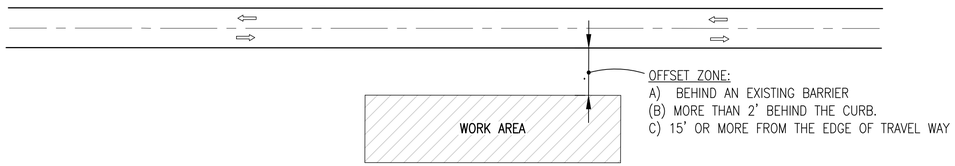


## C1 TRAFFIC CONTROL PLAN – TWO-LANE TWO-WAY, WORK OUTSIDE SHOULDER

NOT TO SCALE

### SYMBOLS

- WORK AREA
- LANE IDENTIFICATION + DIRECTION OF TRAFFIC

### GENERAL NOTES

1. IF THE WORK OPERATION (EXCLUDING ESTABLISHING AND TERMINATING THE WORK AREA) REQUIRES THAT TWO OR MORE WORK VEHICLES CROSS THE OFFSET ZONE IN ANY ONE HOUR, TRAFFIC CONTROL WILL BE IN CONFORMANCE WITH INDEX NO. 602.
2. NO SPECIAL SIGNING IS REQUIRED.
3. WHEN A SIDE ROAD INTERSECTS THE HIGHWAY WITHIN THE WORK AREA ADDITIONA TTC DEVICES SHALL BE PLACED IN ACCORDANCE WITH OTHRE APPLICABLE TCZ INDEXES.
4. WHEN CONSTRUCTION ACTIVITIES ENCROACH ON A SIDEWALK REFER TO INDEX NO. 660.
5. FOR GENERAL TCZ REQUIREMENTS AND ADDITIONAL INFORMATION REFER TO INDEX NO. 600.

## CONDITIONS

WHERE ANY VEHICLE, EQUIPMENT, WORKERS OR THEIR ACTIVITIES ENCROACH THE AREA CLOSER THAN 15' BUT NOT CLOSER THAN 2' TO THE EDGE OF PAVEMENT FOR A PERIOD OF 60 MINUTES OR GREATER.

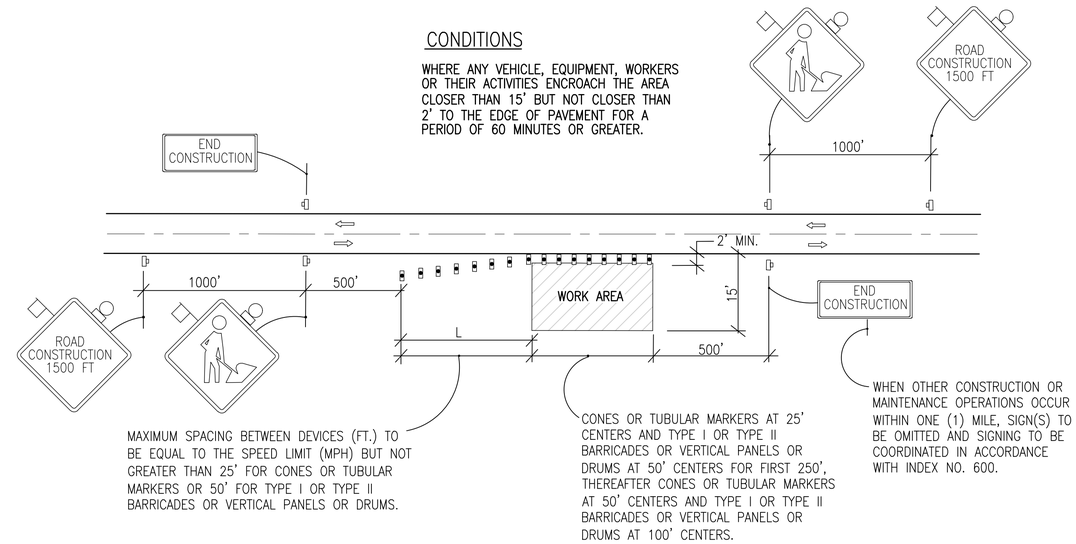


## C4 TRAFFIC CONTROL PLAN –SINGLE LANE

NOT TO SCALE

### GENERAL LANE CLOSURE NOTES

1. WORK OPERATIONS SHALL BE CONFINED TO ONE TRAFFIC LANE, LEAVING THE ADJACENT LANE OPEN TO TRAFFIC.
2. ALL VEHICLES, EQUIPMENT, WORKERS AND THEIR ACTIVITIES ARE RESTRICTED AT ALL TIMES TO ONE SIDE OF THE PAVEMENT.
3. ALL SIGNS SHALL BE POST MOUNTED IF THE CLOSURE TIME EXCEEDS 12 HOURS.
4. WHEN WORK IS BEING PERFORMED ON A MULTILANE UNDIVIDED ROADWAY THE SIGNS NORMALLY MOUNTED IN THE MEDIAN (AS SHOWN) SHALL BE OMITTED.

### SYMBOLS

- WORK AREA
- SIGN WITH 18" X 18" (MIN.) ORANGE FLAG AND TYPE B LIGHT
- TYPE I OR TYPE II BARRICADE OR VERTICAL PANEL OR DRUM (W/ STEADY BURNING LIGHT AT NIGHT ONLY). CONES OR TUBULAR MARKERS MAY BE USED DURING DAYLIGHT ONLY.
- WORK ZONE SIGN

### GENERAL NOTES

1. ALL VEHICLES, EQUIPMENT, WORKERS (EXCEPT FLAGGERS) AND THEIR ACTIVITIES ARE RESTRICTED AT ALL TIMES TO ONE SIDE OF THE ROADWAY.
2. IF THE WORK OPERATION DOES NOT EXCEED 60 MINUTES, TRAFFIC CONTROL WILL BE IN CONFORMANCE WITH INDEX NO. 607.
3. IF THE WORK OPERATION ENCROACHES ON THE THROUGH TRAFFIC LANES OR WHEN FOUR OR MORE WORK VEHICLES ENTER THE THROUGH TRAFFIC LANES IN A ONE HOUR PERIOD A FLAGGER SHALL BE PROVIDED AND A FLAGGER SIGN SHALL BE SUBSTITUTED FOR THE WORKERS SIGN. THE FLAGGER SHALL BE POSITIONED AT THE POINT OF VEHICLE ENTRY OR DEPARTURE FROM THE WORK AREA.
4. THE FIRST TWO WARNING SIGNS, EACH SIDE, SHALL HAVE A 18" X 18" (MIN.) ORANGE FLAG AND A TYPE B LIGHT ATTACHED AND OPERATING AT ALL TIMES. MESH SIGNS MAY BE USED FOR (DAYLIGHT ONLY) OPERATIONS. TYPE B LIGHTS AND ORANGE FLAGS ARE NOT REQUIRED.
5. THE WORKERS LEGEND SIGN MAY BE SUBSTITUTED FOR THE SYMBOL SIGN.
6. ALL SIGNS SHALL BE POST MOUNTED IF THE CLOSURE EXCEEDS 12 HOURS.
7. L (MIN)= $\frac{WS}{2}$ FOR SPEEDS ≥ 45 MPH

   = $\frac{WS^2}{120}$ FOR SPEEDS ≤ 40 MPH

   WHERE:

   W= WIDTH OF LATERAL TRANSITION IN FEET

   S= POSTED SPEED LIMIT (MPH).
8. ARROWS DENOTE DIRECTION OF TRAFFIC ONLY AND DO NOT REFLECT PAVEMENT MARKINGS.
9. LONGITUDINAL DIMENSIONS ARE TO BE ADJUSTED TO FIT FIELD CONDITIONS. SEE FDOT INDEX NO. 600.
10. WORKERS SIGNS TO BE REMOVED OR FULLY COVERED WHEN NO WORK IS BEING PERFORMED.
11. END CONSTRUCTION SIGNS REQUIRED ONLY WHEN WORK EXCEEDS ONE DAYLIGHT PERIOD.
12. WHEN A SIDE ROAD INTERSECTS THE HIGHWAY ON WHICH WORK IS BEING PERFORMED ADDITIONAL TRAFFIC CONTROL DEVICES SHALL BE ERECTED IN ACCORDANCE WITH OTHER APPLICABLE TCZ INDEXES.
13. FOR GENERAL TCZ REQUIREMENTS AND ADDITIONAL INFORMATION, REFER TO FDOT INDEX 600.


BASKERVILLE-DONOVAN, INC.
Innovative Infrastructure Solutions
449 W. MAIN ST., PENSACOLA, FL 32502 (850)438-9661
ENGINEERING BUSINESS: EB-0000340
Pensacola - Panama City Beach - Tallahassee - Mobile



This drawing is the property of BASKERVILLE-DONOVAN, INC. and is not to be reproduced in whole or in part. It is not to be used on any other project and is to be returned upon request.


JAMES E. ANDERSON, P.E.
FL. REG. ENGINEER #67494

SSRUS SOUNDSIDE SEPTIC TANK ELIMINATION PROGRAM PHASE B

SANTA ROSA COUNTY, FLORIDA

| NO. | DATE | APPR. | REVISION/ACTION TAKEN |
|---|---|---|---|
| 1 | 02/22 | JEA | RELEASED FOR BID |

NOT RELEASED FOR CONSTRUCTION BY DATE

PROJECT NO: 20410.46
DESIGNED BY: KG
DRAWN BY: THO
CHK'D BY: JEA
PROJ. MGR: RWD
DATE: FEBRUARY 2022

MAINTENANCE OF TRAFFIC DETAILS

C-905


K:\204 Gulf Breeze and SSRUS\20410.46 Soundside STEP\DWG\C-905.dwg, Feb 02, 2022 - 10:25:34AM, toverton